ELERO, s.r.o.
Považská Teplá 28
017 05 Považská Bystrica
Slovakia

Tel.: 00421 42 4331991-2
Mobile: 00421 907 411 787
Fax/Tel.: 00421 42 4331990
E-mail: elero@elero.sk www.elero.sk

CLAMPING SYSTEM ELERO FOR DIE-SINKING EDM, PALLETISATION COMPATIBLE WITH 3-R

Clamping systems compatible with 3-R

The following components of the palletisation clamping system enable the material for the electrode (copper, graphite etc.) to be clamped directly into the pallet or into the collet chuck holder. The material can then be machined in a machining centre, milling machine, lathe, grinding machine or EDM wire cutter etc. The finished product (the electrode), whilst still clamped into pallet or collet chuck holder, can now be clamped directly to the EDM die-sinker without the need for further adjustment of the electrode. Repeatable accuracy for the positioning of the pallets or collet chuck holders into the clamping chucks is 0,002mm.

Clamping pallets Uniholder stainless steel, with transversal groove

Item No.:

EL-3M0015-1	Clamping pallets U10 stainless steel, groove width 10,5mm
EL-3M0015	Clamping pallets U15 stainless steel, groove width 15,5mm
EL-3M0016	Clamping pallets U20 stainless steel, groove width 20,5mm
EL-3M0017	Clamping pallets U25 stainless steel, groove width 25,5mm
EL-3M0018	Clamping pallets U30 stainless steel, groove width 30,5mm
EL-3M00181	Clamping pallets U35 stainless steel, groove width 35,5mm
EL-3M00182	Clamping pallets U40 stainless steel, groove width 40,5mm
EL-3M00183	Clamping pallets U45 stainless steel, groove width 45,5mm
EL-3M00184	Clamping pallets U50 stainless steel, groove width 50,5mm



Different sizes of clamping groove: 10,5mm, 15,5mm, 20,5mm, 25,5mm, 30,5mm, 35,5mm, 40,5mm, 45,5mm, 50,5mm

Clamping pallets Prisround stainless steel, with hole

Item No.:

EL-3M0019-1	Clamping pallets S10 stainless steel, with hole 11,5x11,5mm
EL-3M0019	Clamping pallets S15 stainless steel, with hole 16,5x16,5mm
EL-3M0020	Clamping pallets S20 stainless steel, with hole 21,5x21,5mm
EL-3M0021	Clamping pallets S25 stainless steel, with hole 26,5x26,5mm
EL-3M0022	Clamping pallets S30 stainless steel, with hole 31,5x31,5mm



Different dimensions of clamping holes: 11,5x11,5, 16,5x16,5, 21,5x21,5, 26,5x26,5, 31,5x31,5mm

Clamping pallets Uniplate, flat

Item No.:

EL-3M0051	Clamping pallet 51x51mm stainless steel, flat
EL-3M0081	Clamping pallet 81x51mm stainless steel, flat
EL-3M0092	Clamping pallet 92x150mm stainless steel, flat



Erowa®, ITS® are registered Trade Marks of EROWA AG.
MACRO®, System 3R® are registered Trade Marks of System 3R International AB.

ELERO
Equipment for EDM
Potreby pre elektroeróziu

ELERO, s.r.o.
Považská Teplá 28
017 05 Považská Bystrica
Slovakia

Tel.: 00421 42 4331991-2
Mobile: 00421 907 411 787
Fax/Tel.: 00421 42 4331990
E-mail: elero@elero.sk www.elero.sk

Clamping systems compatible with 3-R

Item No.: EL-3M0001
Clamping pallet 54x54mm stainless steel, flat



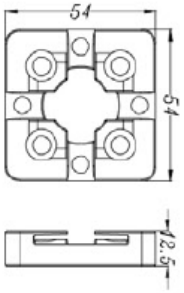

Item No.: EL-3M0002
Clamping pallet 70x70mm stainless steel, flat

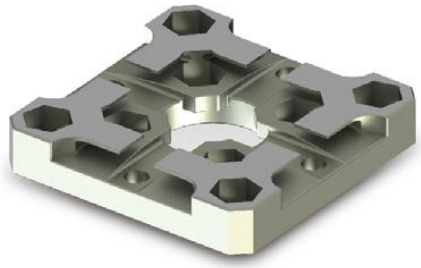

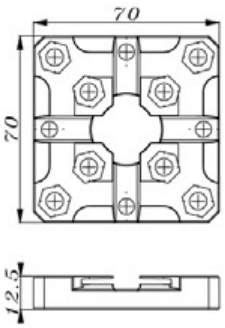

Item No.: EL-3M0001/S
Spacer for pallet 54x54mm



Item No.: EL-3M0002/30
Clamping pallet 70x70x30mm stainless, flat



Item No.: EL-3M0051/A
Clamping pallet aluminium, flat



Erowa®, ITS® are registered Trade Marks of EROWA AG.
MACRO®, System 3R® are registered Trade Marks of System 3R International AB.

ELERO
Equipment for EDM
Potreby pre elektroeróziu

ELERO, s.r.o.
Považská Teplá 28
017 05 Považská Bystrica
Slovakia

Tel.: 00421 42 4331991-2
Mobile: 00421 907 411 787
Fax/Tel.: 00421 42 4331990
E-mail: elero@elero.sk www.elero.sk

Clamping systems compatible with 3-R

Item No.: EL-3MV0008 Universal stainless adjustable holder 20x20mm~50x50mm

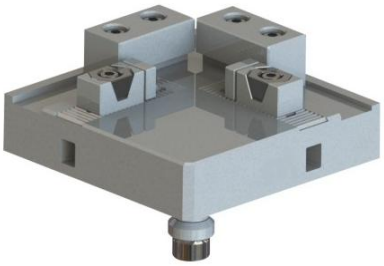

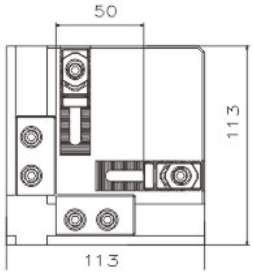

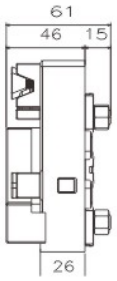

Item No.: EL-3MV0009 Universal stainless adjustable holder 25x50mm~50x100mm

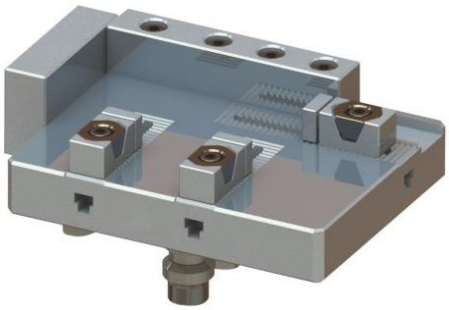

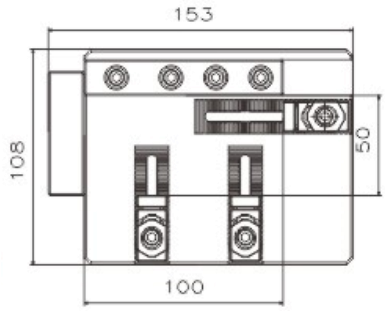

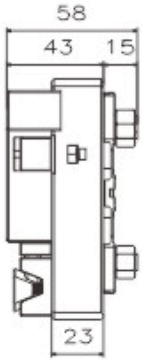

Item No.: EL-3MV0010 Universal stainless adjustable holder 50x50mm~100x100mm

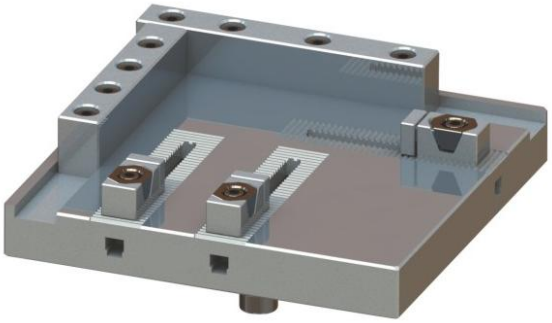

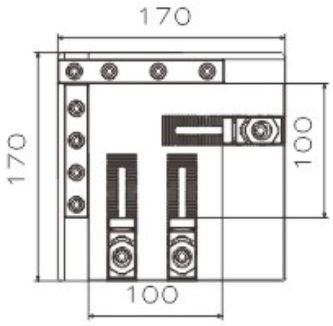

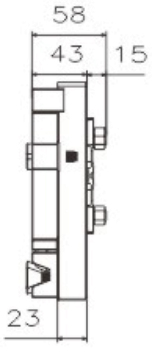

Item No.: EL-3MV0011 Universal stainless adjustable holder 100x100mm~150x150mm

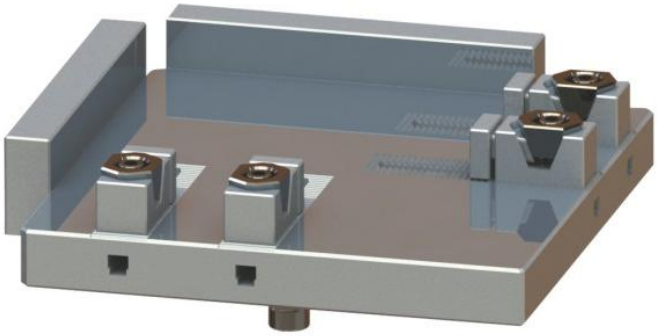

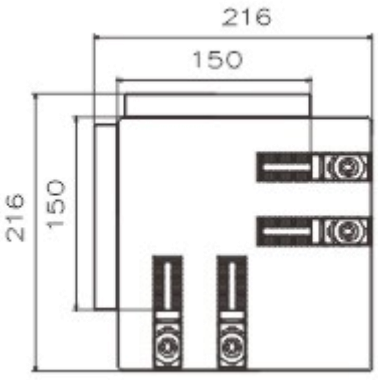

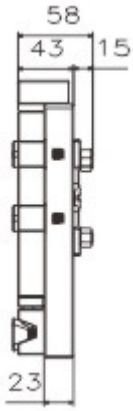

Erowa®, ITS® are registered Trade Marks of EROWA AG.
MACRO®, System 3R® are registered Trade Marks of System 3R International AB.

ELERO
Equipment for EDM
Potreby pre elektroeróziu

ELERO, s.r.o.
Považská Teplá 28
017 05 Považská Bystrica
Slovakia

Tel.: 00421 42 4331991-2
Mobile: 00421 907 411 787
Fax/Tel.: 00421 42 4331990
E-mail: elero@elero.sk www.elero.sk

Clamping systems compatible with 3-R

Item No.: EL-3MV0012 Universal stainless adjustable holder 25x100mm~50x200mm

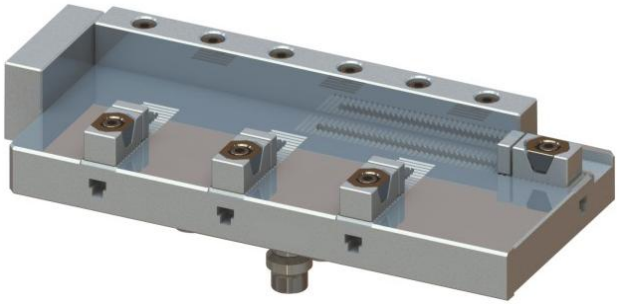

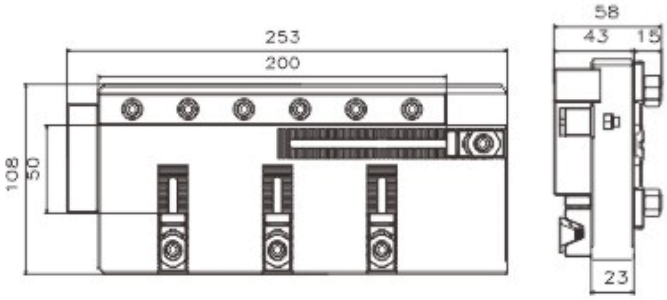

Item No.: EL-3MV0013 Universal adjustable stainless prism holder Ø20~60mm

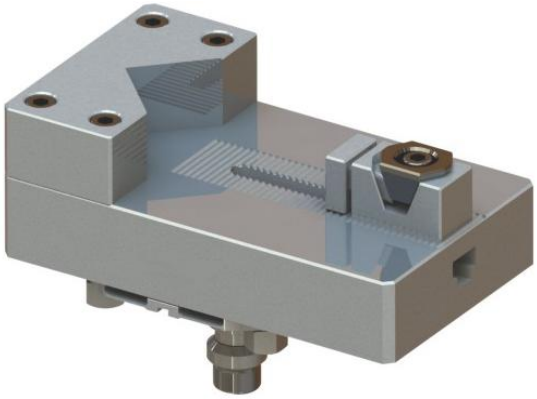

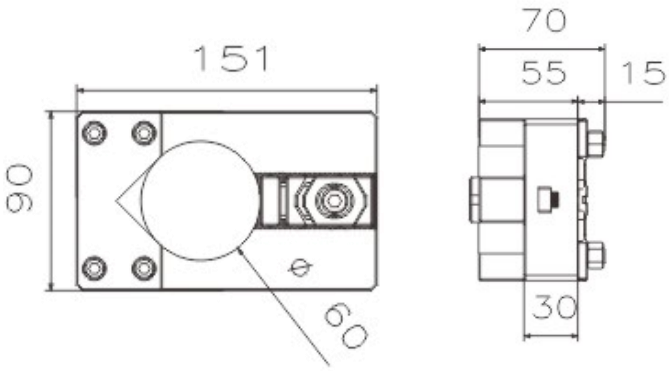

Item No.: EL-3MV0014 Universal stainless holder 222x145x37mm

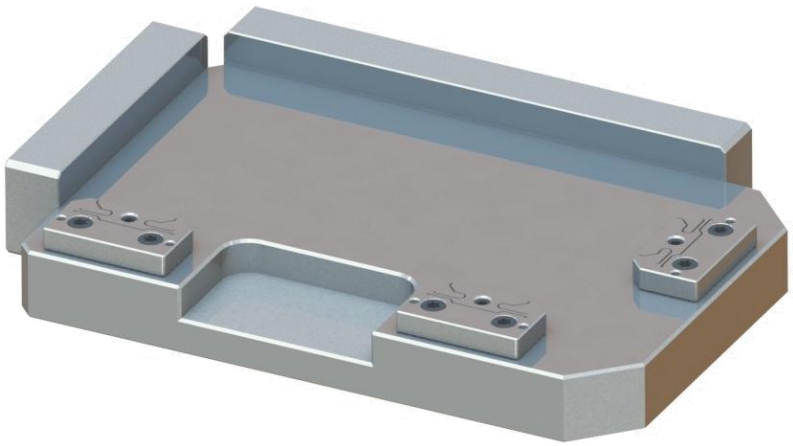

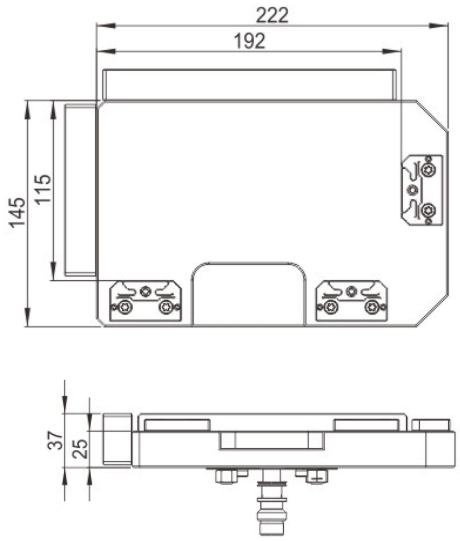

Erowa®, ITS® are registered Trade Marks of EROWA AG.
MACRO®, System 3R® are registered Trade Marks of System 3R International AB.

ELERO, s.r.o.
Považská Teplá 28
017 05 Považská Bystrica
Slovakia

Tel.: 00421 42 4331991-2
Mobile: 00421 907 411 787
Fax/Tel.: 00421 42 4331990
E-mail: elero@elero.sk www.elero.sk

Clamping systems compatible with 3-R

tem No.: EL-3M0049 Stainless clamping pallet D160mm



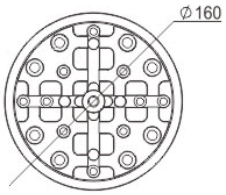

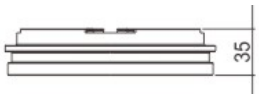

Item No.: EL-3M0003
Manual spigot, short
Spigot for manual chucks with internal flushing hole. Individually packaged.

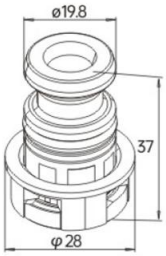



Item No.: EL-3M0004
Automatic spigot, long
Spigot for pneumatic chucks, suitable also for automatic exchange, with internal flushing hole. Individually packaged.

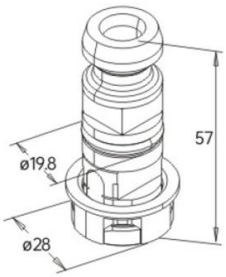



Item No.: EL-3M0005
Plastic part of spigots EL-3M0003 and EL-3M0004

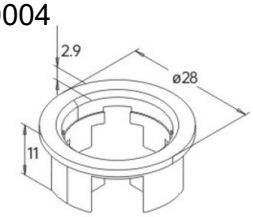



Item No.: EL-3M0037
Manual quick chuck D100 with base, clamping power 10 000N.
Suitable for milling machines, machining centre, grinding machines, EDM wire cutters or EDM die-sinking machines...



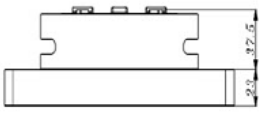

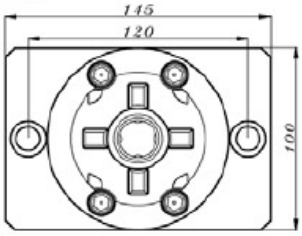

Erowa®, ITS® are registered Trade Marks of EROWA AG.
MACRO®, System 3R® are registered Trade Marks of System 3R International AB.

ELERO, s.r.o.
Považská Teplá 28
017 05 Považská Bystrica
Slovakia

Tel.: 00421 42 4331991-2
Mobile: 00421 907 411 787
Fax/Tel.: 00421 42 4331990
E-mail: elero@elero.sk www.elero.sk

Clamping systems compatible with 3-R

Item No.: EL-3M0036

Manual quick chuck D100, clamping power 10 000N.

Suitable for lathe, milling machines, machining centre, grinding machines, EDM wire cutters or EDM die-sinking machines...

.





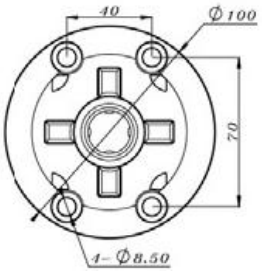

Item No.: EL-3M0038

Manual quick chuck D100, clamping power 10 000N.



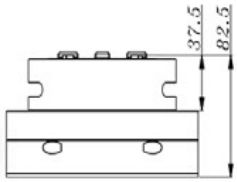

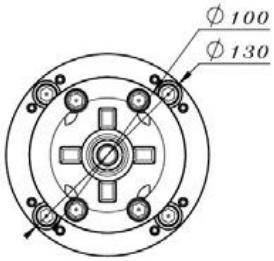

Item No.: EL-3M0033

D75 manual chuck, clamping power 10 000N.

Suitable for lathe, milling machines, machining centre, grinding machines, EDM wire cutters or EDM die-sinking machines...



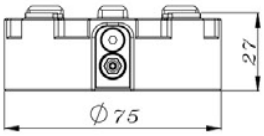

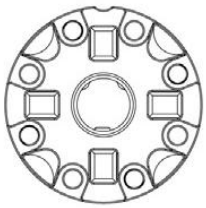

Item No.: EL-3M0034

D75 Manual chuck, clamping power 6000N.

Suitable for milling machines and machining centre



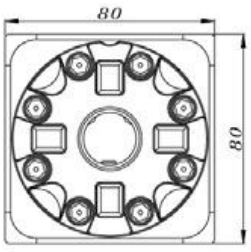

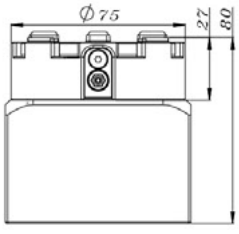

Item No.EL-3M0034-1

Manual square quick chuck 70x70mm, cl.power 6000N



Erowa®, ITS® are registered Trade Marks of EROWA AG.
MACRO®, System 3R® are registered Trade Marks of System 3R International AB.

ELERO, s.r.o.
Považská Teplá 28
017 05 Považská Bystrica
Slovakia

Tel.: 00421 42 4331991-2
Mobile: 00421 907 411 787
Fax/Tel.: 00421 42 4331990
E-mail: elero@elero.sk www.elero.sk

Clamping systems compatible with 3-R

Item No.: EL-3M0035 D75 Manual chuck, clamping power 6000N.



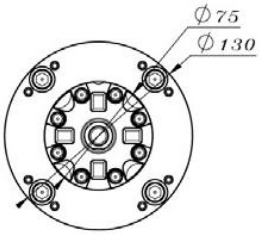

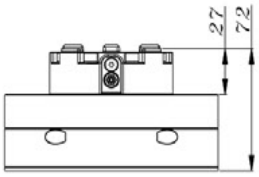

Item No.: EL-3M0046 70mm square manual chuck, clamping power 6000N.



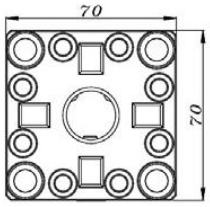

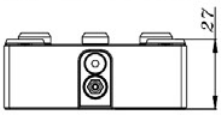

Item No.: EL-3M0036A 56x56mm square manual quick chuck, clamping power 4000N.



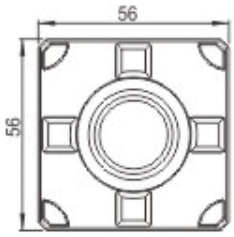

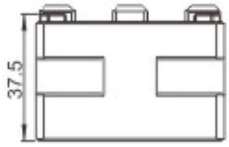

Item No.: EL-3M0033-1
Low profile manual quick chuck D100



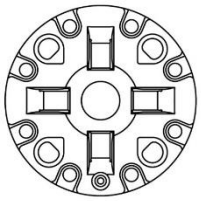

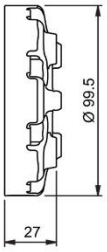

Item No.: EL-3M0033-2
Low profile manual chuck D140



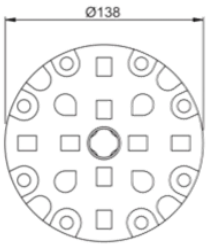



Item No.: EL-3M0054A 90° adaptor



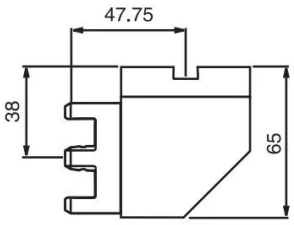

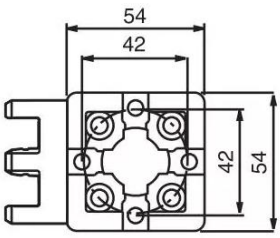

Erowa®, ITS® are registered Trade Marks of EROWA AG.
MACRO®, System 3R® are registered Trade Marks of System 3R International AB.

ELERO
Equipment for EDM
Potreby pre elektroeróziu

ELERO, s.r.o.
Považská Teplá 28
017 05 Považská Bystrica
Slovakia

Tel.: 00421 42 4331991-2
Mobile: 00421 907 411 787
Fax/Tel.: 00421 42 4331990
E-mail: elero@elero.sk www.elero.sk

Clamping systems compatible with 3-R

Item No.: EL-3M0054B 90° adaptor with manual square quick chuck



Item No.: EL-3M0050 90° adaptor with pneumatic clamping chuck D100
Item No.: EL-3M0054 90° adaptor with manual clamping chuck D100

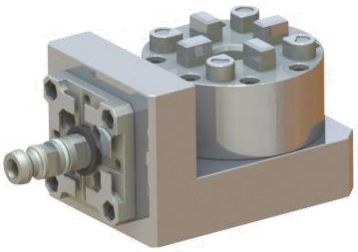

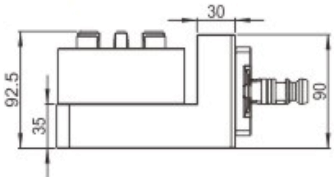

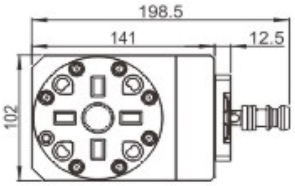

Item No.: EL-3M0046B Manual quick chuck on extension rod



Item No.: EL-3M0036/100
Manual quick chuck
on extension rod 100mm



Item No.: EL-3M0036/200
Manual quick chuck
onextension rod 200mm



Item No.: EL-3M0036B/250
Manual quick chuck
on extension rod 250mm



Erowa®, ITS® are registered Trade Marks of EROWA AG.
MACRO®, System 3R® are registered Trade Marks of System 3R International AB.

ELERO
Equipment for EDM
Potreby pre elektroeróziu

ELERO, s.r.o.
Považská Teplá 28
017 05 Považská Bystrica
Slovakia

Tel.: 00421 42 4331991-2
Mobile: 00421 907 411 787
Fax/Tel.: 00421 42 4331990
E-mail: elero@elero.sk www.elero.sk

Clamping systems compatible with 3-R

Item No.: EL-3M0046/150
Manual quick chuck on extension rod 150mm



Item No.: EL-3M0046/250
Manual quick chuck
on extension rod 250mm



Item No.: EL-3M0036/300
Manual quick chuck
on extension rod 300mm



Item No.: EL-3M0036/90°
Manual quick chuck on 90° arm



Erowa®, ITS® are registered Trade Marks of EROWA AG.
MACRO®, System 3R® are registered Trade Marks of System 3R International AB.

ELERO, s.r.o.
Považská Teplá 28
017 05 Považská Bystrica
Slovakia

Tel.: 00421 42 4331991-2
Mobile: 00421 907 411 787
Fax/Tel.: 00421 42 4331990
E-mail: elero@elero.sk www.elero.sk

Clamping systems compatible with 3-R

Item No.: EL-3M0048
Pneumatic clamping chuck D160
with base, clamping power 15 000N.

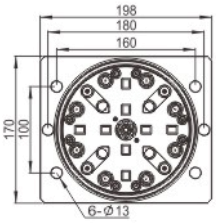

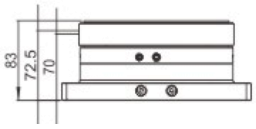



Item No.: EL-3M0048-1
Low profile pneumatic clamping chuck D160
with base, clamping power 15 000N.



Item No.: EL-3M0039 Pneumatic chuck D100, clamping power 10 000N.



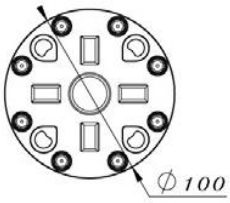

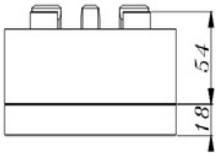

Item No.: EL-3M0040 Pneumatic chuck D100 with base, clamping power 10 000N.



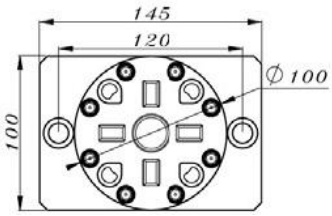

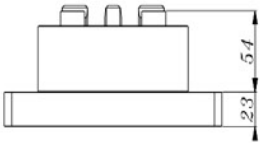

Item No.: EL-3M0041 Pneumatic chuck D100 with base, clamping power 10 000N.



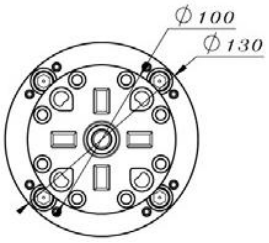

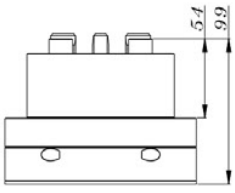

Erowa®, ITS® are registered Trade Marks of EROWA AG.
MACRO®, System 3R® are registered Trade Marks of System 3R International AB.

ELERO, s.r.o.
Považská Teplá 28
017 05 Považská Bystrica
Slovakia

Tel.: 00421 42 4331991-2
Mobile: 00421 907 411 787
Fax/Tel.: 00421 42 4331990
E-mail: elero@elero.sk www.elero.sk

Clamping systems compatible with 3-R

Item No.: EL-3M0041-1 Pneumatic clamping chuck D100
with base, clamping power 10 000N.



Item No.: EL-3M0051 Workholding plate with 4 pneumatic chucks, clamping power 10 000N



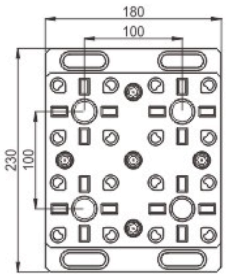

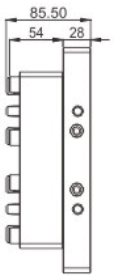

Item No.: EL-3M0052 Workholding plate with 6 pneumatic chucks, clamping power 10 000N

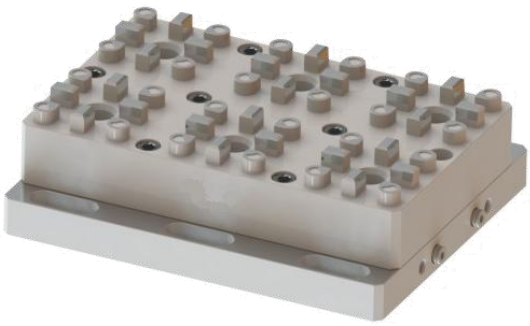

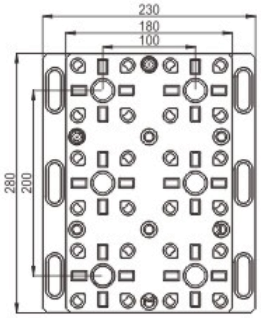

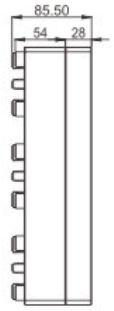

Item No.: EL-Q0017
Pneumatic switch
for chucks control
(EDM type)



Item No.: EL-Q0018
Pneumatic switch
for chucks control
(CNC type)



Item No.: EL-Q0020 Pneumatic regulator



Item No.: EL-Q0019 Pneumatic hose



Erowa®, ITS® are registered Trade Marks of EROWA AG.
MACRO®, System 3R® are registered Trade Marks of System 3R International AB.

ELERO
Equipment for EDM
Potreby pre elektroeróziu

ELERO, s.r.o.
Považská Teplá 28
017 05 Považská Bystrica
Slovakia

Tel.: 00421 42 4331991-2
Mobile: 00421 907 411 787
Fax/Tel.: 00421 42 4331990
E-mail: elero@elero.sk www.elero.sk

Clamping systems compatible with 3-R

Workholding plates with multiple pneumatic chucks, clamping power 10 000N.

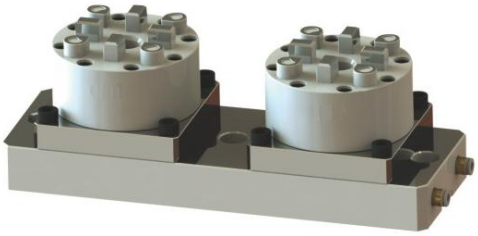



Item No.:	Model	Dimens. mm	Control
EL-3M0042	Workholding plate with 2 pneumatic chucks D100	300x102x105	2 chucks / 1 switch
EL-3M0043	Workholding plate with 3 pneumatic chucks D100	460x102x105	3 chucks / 1 switch
EL-3M0044	Workholding plate with 4 pneumatic chucks D100	330x290x105	4 chucks / 2 switches
EL-3M0045	Workholding plate with 6 pneumatic chucks D100	410x310x105	6 chucks / 2 switches

Erowa®, ITS® are registered Trade Marks of EROWA AG.
MACRO®, System 3R® are registered Trade Marks of System 3R International AB.

ELERO, s.r.o.
Považská Teplá 28
017 05 Považská Bystrica
Slovakia

Tel.: 00421 42 4331991-2
Mobile: 00421 907 411 787
Fax/Tel.: 00421 42 4331990
E-mail: elero@elero.sk www.elero.sk

Clamping systems compatible with 3-R

Item No.: EL-3M0014A Reduction from EROW.A to 3-R with manual quick chuck



Item No.: EL-3M0014B Reduction from EROW.A to 3-R with manual quick chuck



Item No.: EL-Q0023A Reduction from 3-R to EROW.A ITS100 with manual quick chuck



Item No.: EL-Q0023B Reduction from 3-R to EROW.A ITS50 with manual quick chuck



Erowa®, ITS® are registered Trade Marks of EROWA AG.
MACRO®, System 3R® are registered Trade Marks of System 3R International AB.

ELERO, s.r.o.
Považská Teplá 28
017 05 Považská Bystrica
Slovakia

Tel.: 00421 42 4331991-2
Mobile: 00421 907 411 787
Fax/Tel.: 00421 42 4331990
E-mail: elero@elero.sk www.elero.sk

Clamping systems compatible with 3-R

Item No.: EL-3M0009-1
Gauging pin 50x50mm, Φ40mm

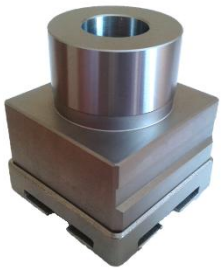

Item No.: EL-3M0008
Parallel gauging pin 100x60mm



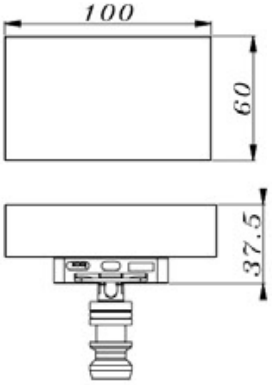

Notice: Clamping spigot is not part of packaging

Item No.: EL-3M0009
Gauging pin



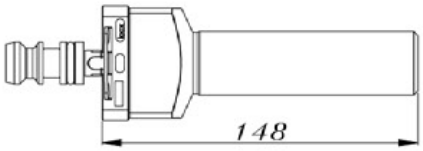

Notice: Clamping spigot is not part of packaging

Item No.: EL-3M0008-1 Reference ruler







Erowa®, ITS® are registered Trade Marks of EROWA AG.
MACRO®, System 3R® are registered Trade Marks of System 3R International AB.

ELERO, s.r.o.
Považská Teplá 28
017 05 Považská Bystrica
Slovakia

Tel.: 00421 42 4331991-2
Mobile: 00421 907 411 787
Fax/Tel.: 00421 42 4331990
E-mail: elero@elero.sk www.elero.sk

Clamping systems compatible with 3-R

Obj. Item No.: EL-3M0013 ER32 Collet holder, for collets ER32, D2 ~ D20mm

ER32

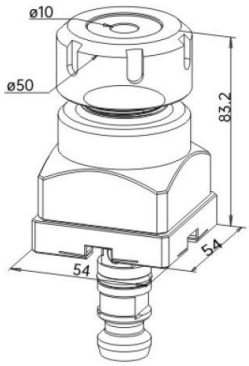



Notice: Clamping spigot is not part of packaging

Item No.: EL-3M0013/16 ER16 collet holder, for collets ER16, D0,5 ~ D10mm

ER16

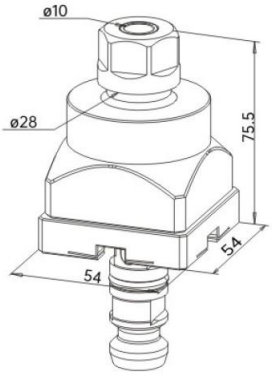



Notice: Clamping spigot is not part of packaging

Item No.: EL-3M0013/40 ER40 collet holder, for collets ER40, D3 ~ D26mm

ER40

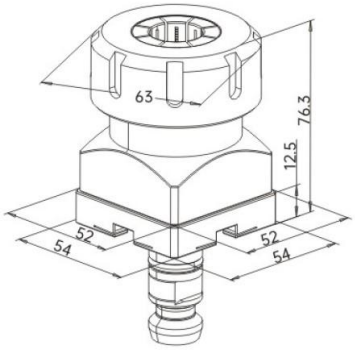



Notice: Clamping spigot is not part of packaging

Erowa®, ITS® are registered Trade Marks of EROWA AG.
MACRO®, System 3R® are registered Trade Marks of System 3R International AB.

ELERO, s.r.o.
Považská Teplá 28
017 05 Považská Bystrica
Slovakia

Tel.: 00421 42 4331991-2
Mobile: 00421 907 411 787
Fax/Tel.: 00421 42 4331990
E-mail: elero@elero.sk www.elero.sk

Clamping systems compatible with 3-R

Item No.: ER32-UM/62252-02/NH-ER32B
Replacement nut of collet holder
EL-3M0013 for collets ER32



Item No.: 62179-01/ER32SET1
Set of high-precision collets ER32,18 pcs of collets
capable clamping the diameters from Ø2 to Ø20mm,
in a carry case + key.
Also possible to order only single high-precision collet



Item No.: 62173-01/ER16SET1
Set of10pcs high precision collets ER16, accuracy class 1
capable clamping diameters from Ø0,5 to Ø10mm,.
Also possible to order only single high-precision collet.



Item No.: 62181-01/ER40SET1
Set of high precision collets ER40, 23pcs of collets
capable clamping diameters from Ø3 to Ø26mm,
in a carry case + key.
Also possible to order only single high-precision collet.



Erowa®, ITS® are registered Trade Marks of EROWA AG.
MACRO®, System 3R® are registered Trade Marks of System 3R International AB.

ELERO, s.r.o.
Považská Teplá 28
017 05 Považská Bystrica
Slovakia

Tel.: 00421 42 4331991-2
Mobile: 00421 907 411 787
Fax/Tel.: 00421 42 4331990
E-mail: elero@elero.sk www.elero.sk

Clamping systems compatible with 3-R

Item No.: 62120-02/C20-ER16-100
Mini collet chuck holder for collets ER16 with 20mm shank.
Suitable for clamping of tube electrodes

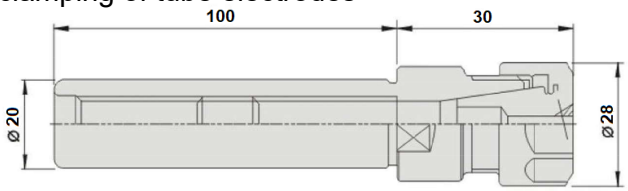



Item No.:
62172-101 High precision collet ER16, Φ1-0,5mm
62172-102 High precision collet ER16, Φ1,5-1mm
62172-103 High precision collet ER16, Φ2-1mm
62172-104 High precision collet ER16, Φ3-2mm
62172-105 High-precision collet ER16, Φ4-3mm
62172-106 High-precision collet ER16, Φ5-4mm
62172-107 High-precision collet ER16, Φ6-5mm
62172-108 High-precision collet ER16, Φ7-6mm
62172-109 High-precision collet ER16, Φ8-7mm
62172-110 High-precision collet ER16, Φ9-8mm
62172-111 High-precision collet ER16, Φ10-9mm



Item No.:
C-ER16/0,1-0,5mm Seal for tube elect. 0,10-0,50mm for collets ER16
C-ER16/0,6-1,0mm Seal for tube elect. 0,60-1,00mm for collets ER16
C-ER16/1,1-1,5mm Seal for tube elect. 1,10-1,50mm for collets ER16
C-ER16/1,6-2,0mm Seal for tube elect. 1,60-2,00mm for collets ER16
C-ER16/2,1-2,5mm Seal for tube elect. 2,10-2,50mm for collets ER16
C-ER16/2,6-3,0mm Seal for tube elect. 2,60-3,00mm for collets ER16
C-ER16/3,1-4,0mm Seal for tube elect. 3,10-4,00mm for collets ER16
C-ER16/4,1-5,0mm Seal for tube elect. 4,10-5,00mm for collets ER16
C-ER16/5,1-6,0mm Seal for tube elect. 5,10-6,00mm for collets ER16



Method of tube and round electrode clamping in the collet holders



→ **EL-3M0013** Collet holder 3-R, for ER32 collets, D2 ~ D20mm

With the high precision collet set 62179-01 / ER32SET1, suitably used according to the electrode diameter in the EL-M0003 collet chuck, can be clamped tube, threaded and round electrodes with diameters Ø2 ~ Ø20mm

→ **62120-02/C20-ER16-100** Mini collet holder for collets ER16 with shank 20mm

With high precision ER16 collets (62172-101 to 62172-104) sealed with C-ER16/ seals, suitably used in the mini collet chuck 62120-02/C20-ER16-100 according to the electrode diameter, can be clamped small tube, threaded and round electrodes with diameters from Ø0.5mm...

Erowa®, ITS® are registered Trade Marks of EROWA AG.
MACRO®, System 3R® are registered Trade Marks of System 3R International AB.

ELERO, s.r.o.
Považská Teplá 28
017 05 Považská Bystrica
Slovakia

Tel.: 00421 42 4331991-2
Mobile: 00421 907 411 787
Fax/Tel.: 00421 42 4331990
E-mail: elero@elero.sk www.elero.sk

Clamping systems compatible with 3-R

Centering sensors, with fixed sensing pin

Item No.:

EL-3M0006-4 Centering sensors, with fixed sensing pin with ball 4mm
EL-3M0006-5 Centering sensors, with fixed sensing pin with ball 5mm
EL-3M0006 Centering sensors, with fixed sensing pin with ball 6mm
EL-3M0006-8 Centering sensors, with fixed sensing pin with ball 8mm

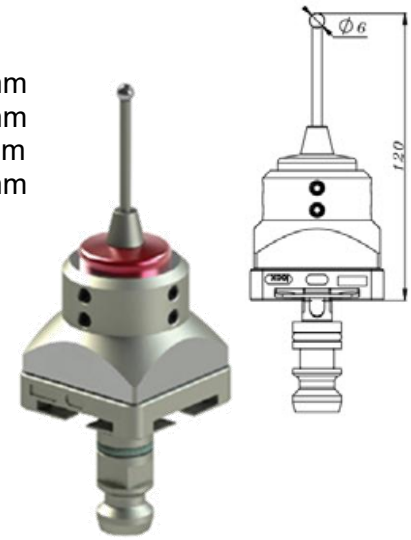

Notice: Clamping spigot is not part of packaging

Replacement sensing pin for centering sensors EL-3M0006:

Item No.:

RSP-0004 Replacement sensing pin with ball 4mm
RSP-0005 Replacement sensing pin with ball 5mm
RSP-0006 Replacement sensing pin with ball 6mm
RSP-0008 Replacement sensing pin with ball 8mm



Centering sensors, with spring-loaded sensing pin

Item No.:

EL-3M0007-2 Centering sensors with spring-loaded sensing pin, with ball 2mm
EL-3M0007-3 Centering sensors with spring-loaded sensing pin, with ball 3mm
EL-3M0007-4 Centering sensors with spring-loaded sensing pin, with ball 4mm
EL-3M0007-5 Centering sensors with spring-loaded sensing pin, with ball 5mm
EL-3M0007-6 Centering sensors with spring-loaded sensing pin, with ball 6mm

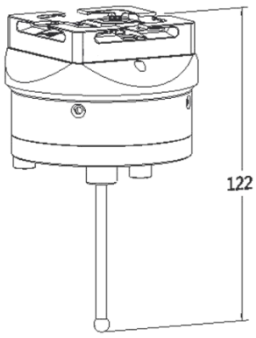

Notice: Clamping spigot is not part of packaging

Replacement sensing pin for spring-loaded centering sensors EL-3M0007:

Item No.:

RSLSP-0002 Replacement spring-loaded sensing pin with ball 2mm
RSLSP-0003 Replacement spring-loaded sensing pin with ball 3mm
RSLSP-0004 Replacement spring-loaded sensing pin with ball 4mm
RSLSP-0005 Replacement spring-loaded sensing pin with ball 5mm
RSLSP-0005 Replacement spring-loaded sensing pin with ball 6mm

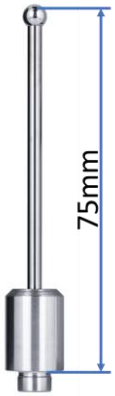

Erowa®, ITS® are registered Trade Marks of EROWA AG.
MACRO®, System 3R® are registered Trade Marks of System 3R International AB.

ELERO, s.r.o.
Považská Teplá 28
017 05 Považská Bystrica
Slovakia

Tel.: 00421 42 4331991-2
Mobile: 00421 907 411 787
Fax/Tel.: 00421 42 4331990
E-mail: elero@elero.sk www.elero.sk

Clamping systems compatible with 3-R

Item No.:

EL-P0001 Magnetic probe for working table of die sinking EDM, with ball 4mm

EL-P0002-1 Magnetic probe for working table of die sinking EDM, with ball 5mm

EL-P0002 Magnetic probe for working table of die sinking EDM, with ball 6mm

EL-P0003 Magnetic probe for working table of die sinking EDM, with ball 8mm



Item No.: EL-3M0014
Adjusting chuck in X, Y, C axis
For square and round electrode clamping up to diameter Ø22mm
Net weight 5kg, height 112mm



Item No.: HCH-20
Hydraulic chuck Macro for Ø20mm shaft Mini



Item No.: EL-MJ0001 Reduction adaptor from Macro to Junior



Item No.: EL-MJ0002 Extension reduction from Macro to Junior

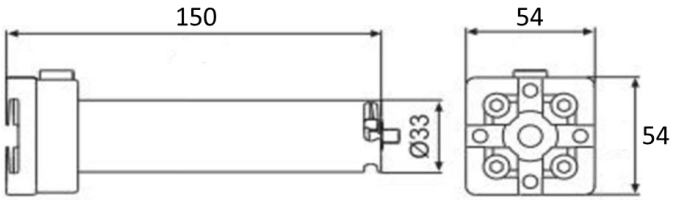



Item No.: EL-MJ0003 Connection washer



Erowa®, ITS® are registered Trade Marks of EROWA AG.
MACRO®, System 3R® are registered Trade Marks of System 3R International AB.

ELERO, s.r.o.
Považská Teplá 28
017 05 Považská Bystrica
Slovakia

Tel.: 00421 42 4331991-2
Mobile: 00421 907 411 787
Fax/Tel.: 00421 42 4331990
E-mail: elero@elero.sk www.elero.sk

Clamping systems compatible with 3-R

Item No.:
EL-M0001/3-R Precision stainless steel holder, with clamping hole for electrode shank 25x25mm
EL-M0004/3-R Precision stainless steel holder, with clamping hole for electrode shank 15x15mm





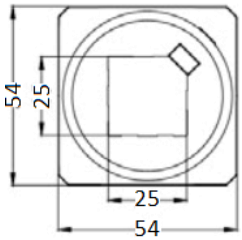

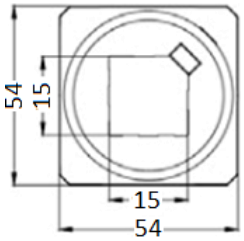

Notice: Clamping spigot is not part of packaging

Copper and graphite electrodes blanks for the production of electrodes for use in precision stainless steel holders EL-M0001/3-R, EL-M0004/3-R, EL-M0001 and EL-M0004

COPPER and GRAPHITE electrode production material - 12pcs in package

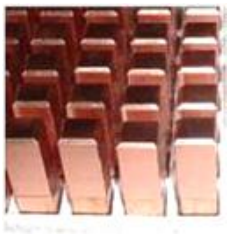

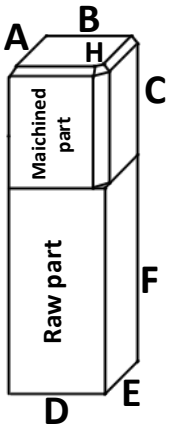

A	B	C	D	E	F	H	Item No.
14,7	14,7	30	15	15	50	2,5	**EL-Cu15-01**
							EL-Gr15-01
24,7	24,7	30	25	25	50	2,5	**EL-Cu25-01**
							EL-Gr25-01

We can supply any other dimensions upon request.

* EL–Cu = copper production material
* EL–Gr = graphite production material

Erowa®, ITS® are registered Trade Marks of EROWA AG.
MACRO®, System 3R® are registered Trade Marks of System 3R International AB.

ELERO, s.r.o.
Považská Teplá 28
017 05 Považská Bystrica
Slovakia

Tel.: 00421 42 4331991-2
Mobile: 00421 907 411 787
Fax/Tel.: 00421 42 4331990
E-mail: elero@elero.sk www.elero.sk

Clamping systems compatible with 3-R

COPPER and GRAPHITE electrode production material - 12pcs in package



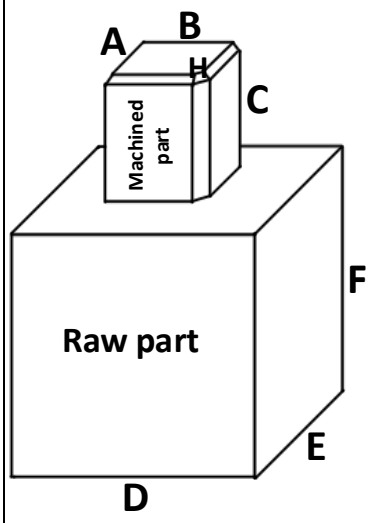

A	B	C	D	E	F	H	Item No.
25	25	30	25	25	50	2,5	EL-Cu25-02
							EL-Gr25-02
25	25	30	30	30	50	2,5	EL-Cu25-03
							EL-Gr25-03
25	25	30	35	35	50	2,5	EL-Cu25-04
							EL-Gr25-04
25	25	30	40	40	50	2,5	EL-Cu25-05
							EL-Gr25-05
25	25	30	50	50	50	2,5	EL-Cu25-06
							EL-Gr25-06

We can supply any other dimensions upon request.

* EL–Cu = copper production material
* EL–Gr = graphite production material

COPPER and GRAPHITE electrode production material - 12pcs in package



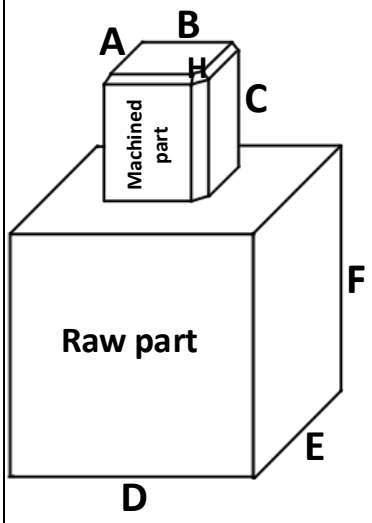

A	B	C	D	E	F	H	Item No.
15	15	30	25	25	50	2,5	EL-Cu15-02
							EL-Gr15-02
15	15	30	30	30	50	2,5	EL-Cu15-03
							EL-Gr15-03
15	15	30	35	35	50	2,5	EL-Cu15-04
							EL-Gr15-04
15	15	30	40	40	50	2,5	EL-Cu15-05
							EL-Gr15-05
15	15	30	50	50	50	2,5	EL-Cu15-06
							EL-Gr15-06

We can supply any other dimensions upon request.

* EL–Cu = copper production material
* EL–Gr = graphite production material

Erowa®, ITS® are registered Trade Marks of EROWA AG.
MACRO®, System 3R® are registered Trade Marks of System 3R International AB.

ELERO, s.r.o.
Považská Teplá 28
017 05 Považská Bystrica
Slovakia

Tel.: 00421 42 4331991-2
Mobile: 00421 907 411 787
Fax/Tel.: 00421 42 4331990
E-mail: elero@elero.sk www.elero.sk

Clamping systems compatible with 3-R

Item No.: EL-HQ0001
Self centering vise 3-R,
Clamping range 0-31mm
Clamping force 2000N

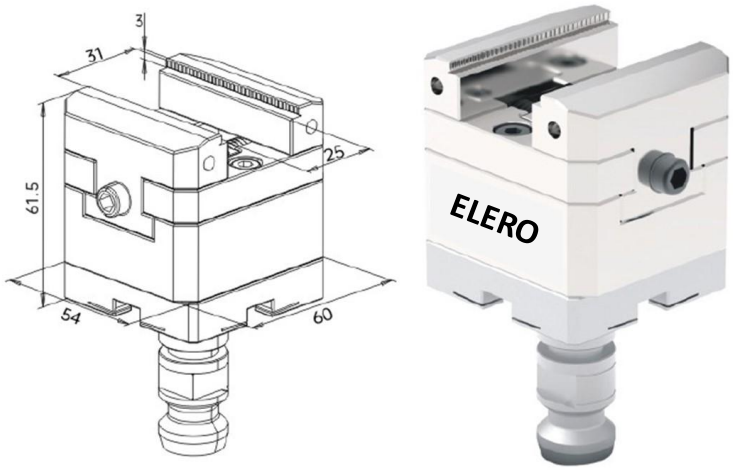

Item No.: EL-3R62
Self centering vise 3-R,
Clamping range 0-62mm
Clamping force 3000N

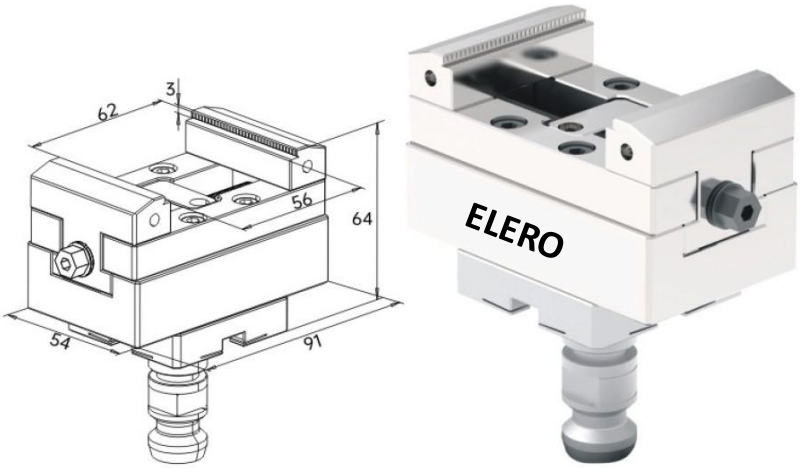

Item No.: EL-3R46X90
Self centering vise ITS50,
Clamping range 0-46mm
Clamping force 4000N

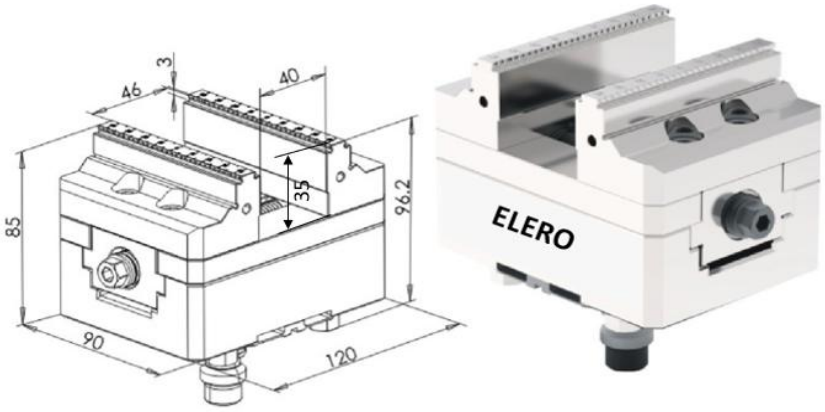

Erowa®, ITS® are registered Trade Marks of EROWA AG.
MACRO®, System 3R® are registered Trade Marks of System 3R International AB.

ELERO, s.r.o.
Považská Teplá 28
017 05 Považská Bystrica
Slovakia

Tel.: 00421 42 4331991-2
Mobile: 00421 907 411 787
Fax/Tel.: 00421 42 4331990
E-mail: elero@elero.sk www.elero.sk

Clamping systems compatible with 3-R

Item No.: EL-V0003A
Magnetic pallet with G plate 3-R 70x70 pallet

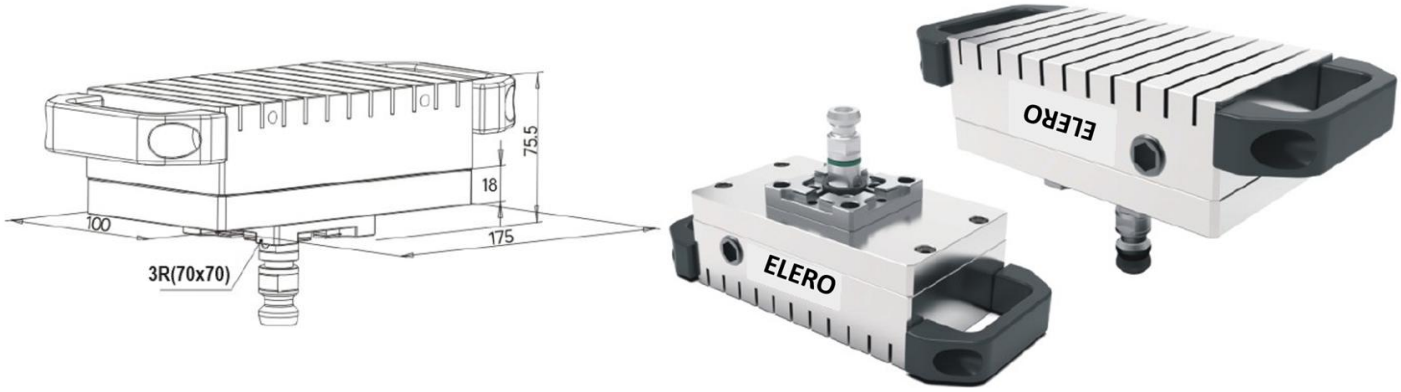

Item No.: EL-T0021-3R
Precision toolmaker vise Unoset 3-R
Clamping range 0-100mm.

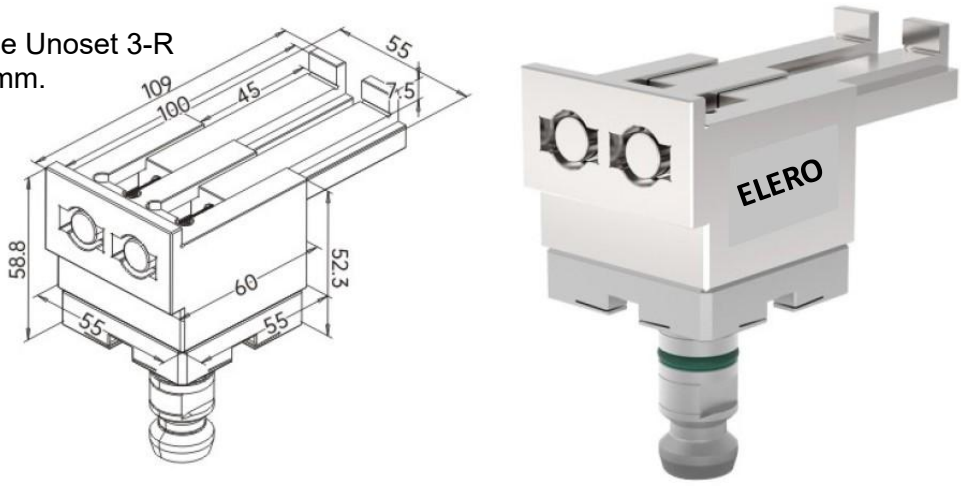

Item No.: EL-T0002-3M
Precision toolmaker vise – pendulum, 3-R
With microadjusting in 3axis, clamping range 0-100mm,
angle setting 0-360°

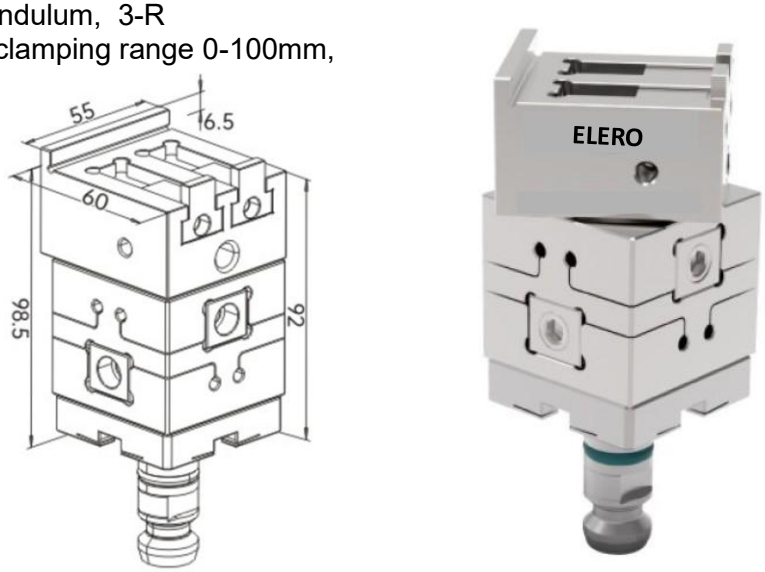

Erowa®, ITS® are registered Trade Marks of EROWA AG.
MACRO®, System 3R® are registered Trade Marks of System 3R International AB.

ELERO, s.r.o.
Považská Teplá 28
017 05 Považská Bystrica
Slovakia

Tel.: 00421 42 4331991-2
Mobile: 00421 907 411 787
Fax/Tel.: 00421 42 4331990
E-mail: elero@elero.sk www.elero.sk

Clamping systems compatible with 3-R

Item No.: EL-3MV0001

Angle clamping unit for pallets and electrode holders compatible with 3-R

Possible to produce with internal flushing (optional)

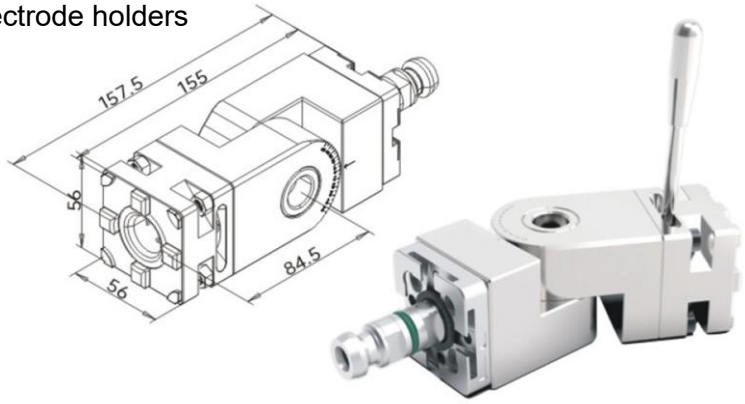

Item No.: EL-3MV0020

Angle collet chuck electrode holder ER16 / 3-R
Scale 0-90°. Rotation range 0-180°.
For electrodes diameter D 0,5-10mm

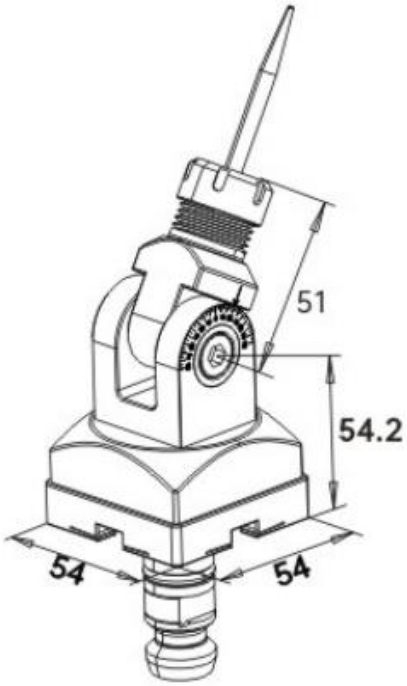



Erowa®, ITS® are registered Trade Marks of EROWA AG.
MACRO®, System 3R® are registered Trade Marks of System 3R International AB.

ELERO, s.r.o.
Považská Teplá 28
017 05 Považská Bystrica
Slovakia

Tel.: 00421 42 4331991-2
Mobile: 00421 907 411 787
Fax/Tel.: 00421 42 4331990
E-mail: elero@elero.sk www.elero.sk

Clamping systems compatible with 3-R

Item No.: 50030-01/PFH-SC04

High-precision stainless dividing device with 3 – jaw 4“ chuck, with fine tuning 360°.
Option to set any angle or use 24-tooth division = 15º ±5”. Rotational accuracy 0,003mm. Repeat clamping accuracy into chuck 0,015mm. Clamping range: I.D.Ø32 - Ø84mm, O.D.Ø3 - Ø90mm. Through hole diameter Ø32mm.



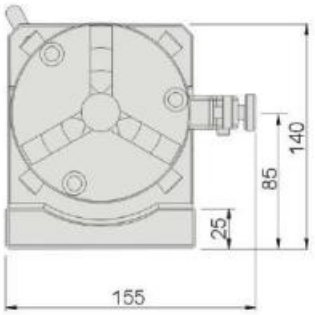

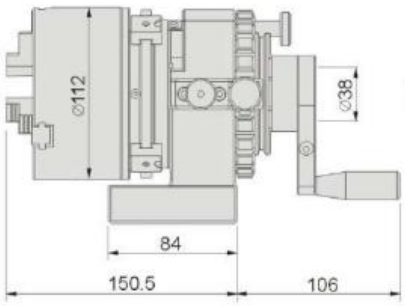

Item No.: 50030-02/PFH-SC05

High-precision stainless dividing device with 3 – jaw 5” chuck, with fine tuning 360º.
Option to set any angle or use 24-tooth division = 15º ±5”. Rotational accuracy 0,003mm. Repeat clamping accuracy into chuck 0,015mm. Clamping range: I.D.Ø35 – Ø110mm, O.D.Ø3 – Ø110mm. Through hole diameter Ø32mm.



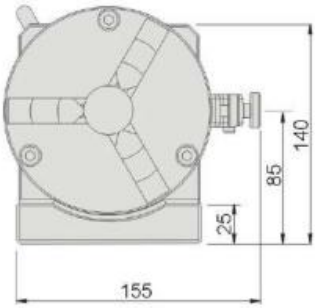

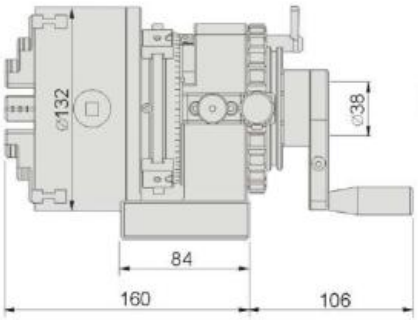

Item No.: 50030-03/04/05 PFH-SER

High-precision stainless dividing device, with fine tuning 360º, with ER20, ER32 or ER50 collets chuck. Option to set any angle or use 24-tooth division = 15º ±5”. Rotational accuracy 0,003mm.



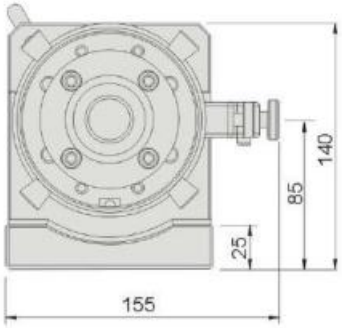

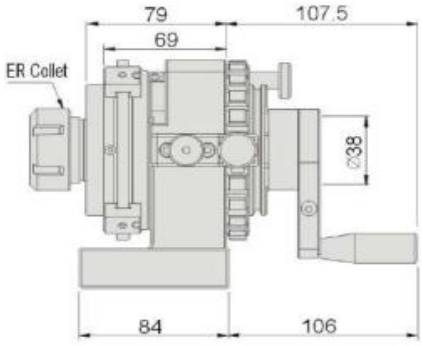

Item No.	Model	ER Collets included	Range Ø mm
50030-03	PFH-SER20	3, 4, 6, 8, 10	1.0 – 13.0
50030-04	PFH-SER32	4, 8, 12, 16, 20	2.0 – 20.0
50030-05	PFH-SER50	12, 18, 20, 30, 34	10.0 – 34.0

Erowa®, ITS® are registered Trade Marks of EROWA AG.
MACRO®, System 3R® are registered Trade Marks of System 3R International AB.

ELERO, s.r.o.
Považská Teplá 28
017 05 Považská Bystrica
Slovakia

Tel.: 00421 42 4331991-2
Mobile: 00421 907 411 787
Fax/Tel.: 00421 42 4331990
E-mail: elero@elero.sk www.elero.sk

Clamping systems compatible with 3-R

Item No.: 50030-07/08 PFH-3R

High-precision stainless dividing device, with fine tuning 360º, with manual quick chuck 3-R compatible with 3-R. Option to set any angle or use 24-tooth division = 15º ±5". Rotational accuracy 0,003mm. Repeat clamping accuracy 0,003mm.

PFH-3R24



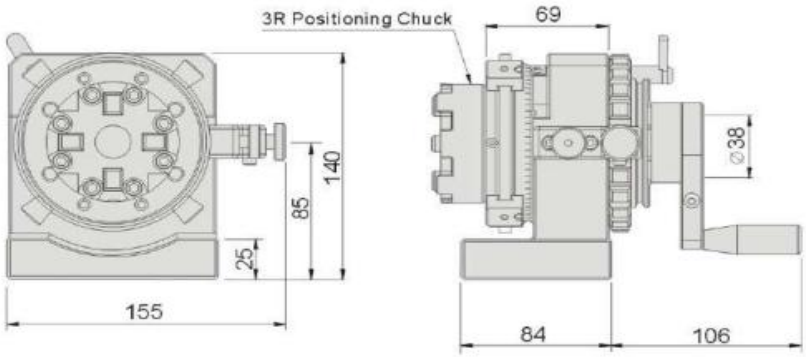

PFH-3R28



Item No.	Model	3R Chuck
50030-07	PFH-3R24	3R24
50030-08	PFH-3R28	3R28

Item No.: 53210-03/04/05 EPF-SER

High-precision stainless dividing device, with fine tuning 360°, with ER20, ER32 or ER50 collets chuck. Option to set any angle or use 24-tooth division = 15º ±5". Rotational accuracy 0,003mm.



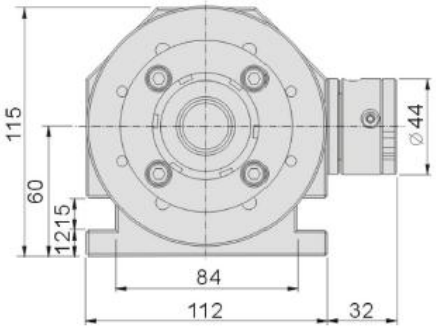

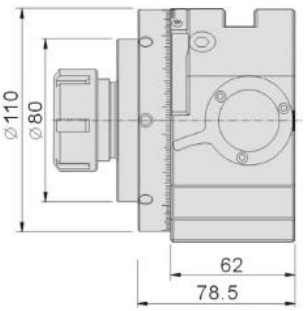

Item No.	Model	ER Collets included	Range Ø mm
53210-03	EPF-SER20	3, 4, 6, 8, 10	1.0 – 13.0
53210-04	EPF-SER32	4, 8, 12, 16, 20	2.0 – 20.0
53210-05	EPF-SER50	12, 18, 20, 30, 34	10.0 – 34.0

Erowa®, ITS® are registered Trade Marks of EROWA AG.
MACRO®, System 3R® are registered Trade Marks of System 3R International AB.

ELERO, s.r.o.
Považská Teplá 28
017 05 Považská Bystrica
Slovakia

Tel.: 00421 42 4331991-2
Mobile: 00421 907 411 787
Fax/Tel.: 00421 42 4331990
E-mail: elero@elero.sk www.elero.sk

Clamping systems compatible with 3-R

Item No.: 53210-07/08 EPF-3R

High-precision stainless dividing device with manual quick chuck 3-R, compatible with 3-R, with fine tuning 360°. Option to set any angle or use 24-tooth division = 15º ±5”. Rotational accuracy 0,003mm. Repeat clamping accuracy 0,003mm.

EPF-3R24



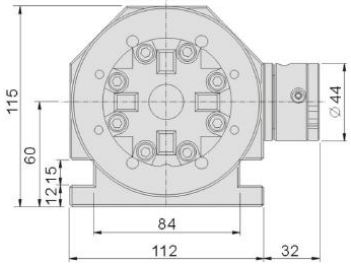

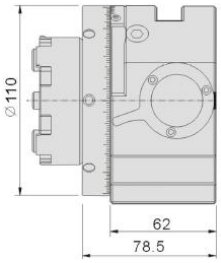

EPF-3R28



Item No.	Model	3R Chuck
53210-07	EPF-3R24	3R24
53210-08	EPF-3R28	3R28

Item No.: EL-3MV0004

Dividing device with manual quick chuck 3-R compatible with 3-R, tilting +90°/-10°, with fine tuning 360°. Option to set any angle or use 1 of 3 dividing plates. Available with 4”, 5” or 6” 3-jaw chuck.









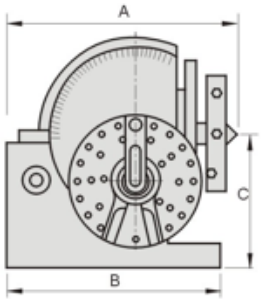

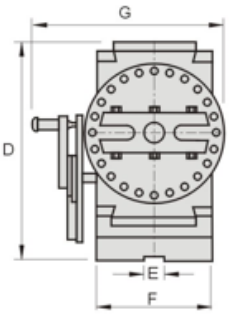

Optional accesory:
4“ or 5“ 3-jaw chuck (for BS0)
5“ or 6“ 3-jaw chuck (for BS1)

Item No.	Model	A	B	C	D	E	F	G
65500-01	BS0	189	160	100	173	16	91	140
65500-02	BS1	293	210	128	220	16	114	156

Device is not stainless steel made! After every use in water it’s necessary to dry it, clean it and apply protection oil!

Erowa®, ITS® are registered Trade Marks of EROWA AG.
MACRO®, System 3R® are registered Trade Marks of System 3R International AB.

ELERO, s.r.o.
Považská Teplá 28
017 05 Považská Bystrica
Slovakia

Tel.: 00421 42 4331991-2
Mobile: 00421 907 411 787
Fax/Tel.: 00421 42 4331990
E-mail: elero@elero.sk www.elero.sk

Clamping systems compatible with 3-R

Item No.: EL-3MV0006

Manual dividing device, stainless steel, with 3-R manual quick chuck compatible with 3-R.
Rotation accuracy 0,02mm.





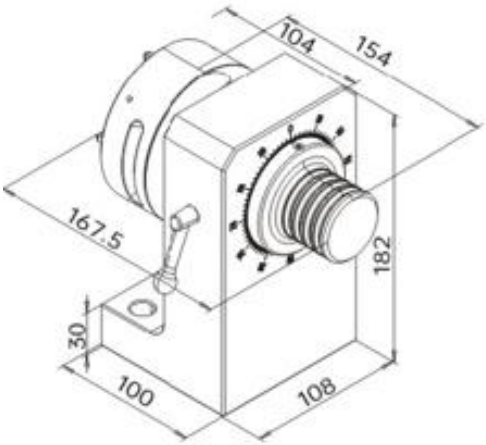

Item No.: EL-V0006-UCH

Manual dividing device, stainless steel, with 3-jaw 4” chuck.
Clamping range: in Ø32 - Ø84mm, out Ø3 - Ø90mm.
Rotation accuracy 0,03mm.





Erowa®, ITS® are registered Trade Marks of EROWA AG.
MACRO®, System 3R® are registered Trade Marks of System 3R International AB.

ELERO, s.r.o.
Považská Teplá 28
017 05 Považská Bystrica
Slovakia

Tel.: 00421 42 4331991-2
Mobile: 00421 907 411 787
Fax/Tel.: 00421 42 4331990
E-mail: elero@elero.sk www.elero.sk

Clamping systems compatible with 3-R

Item No.: EL-2080R Camera detector compatible with 3-R







Screen size/pixels	7´´ / 1080
Visual accuracy	±0,003mm
Magnification´s multiples	50 times
Angle setting	each 15´´
Automatic edge detection	flash after edge finding (cross changes the colour)
Mark-line (cross) colours	White, Red, Green, Blue, Black
Rotation angle	Can manually angle rotate in steps of 15´´
Focus distance	50-60mm over the workpiece
Light source	LED lamp groups with adjustable intensity
Source	Lithium battery 4800mA
Charger	12V (2A)
Dimensions	178x175x93mm
Weight	2kg
Package	silver suitcase

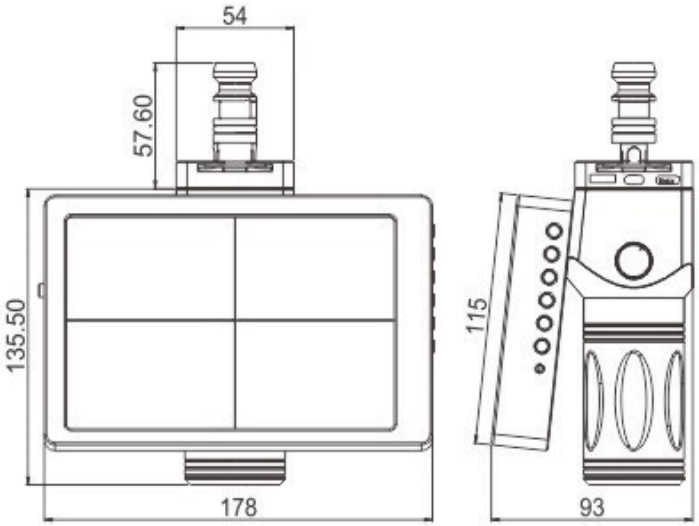

We can offer many other components of our best-selling clamping systems at affordable prices. If you cannot find required clamping system, please see section The best-selling clamping system for electrode production for die-sinking EDM at affordable prices - palletisation compatible with EROW.A, where you can find more products. Almost all of them are available also for clamping systems compatible with 3-R.

Erowa®, ITS® are registered Trade Marks of EROWA AG.
MACRO®, System 3R® are registered Trade Marks of System 3R International AB.