ELERO, s.r.o.
Považská Teplá 28
017 05 Považská Bystrica
Slovakia

Tel.: 00421 42 4331991-2
Mobile: 00421 907 411 787
Fax/Tel.: 00421 42 4331990
E-mail: elero@elero.sk www.elero.sk

CLAMPING SYSTEM ELERO FOR ELECTRODE PRODUCTION FOR DIE-SINKING EDM, PALLETISATION COMPATIBLE WITH EROW.A

Clamping systems compatible with EROW.A

The following components of the palletisation clamping system enable the material for the electrode (copper, graphite etc.) to be clamped directly into the pallet or into the collet chuck holder. The material can then be machined in a machining centre, milling machine, lathe, grinding machine or EDM wire cutter etc. The finished product (the electrode), whilst still clamped into pallet or collet chuck holder, can now be clamped directly to the EDM die-sinker without the need for further adjustment of the electrode. Repeatable accuracy for the positioning of the pallets or collet chuck holders into the clamping chucks is 0,002mm.

Clamping pallets Uniholder ITS50, with transversal groove



Brass:

Item No.:

EL-C0001-1 Clamping pallet U10 brass, width of transversal groove 10,5mm
EL-C0001 Clamping pallet U15 brass, width of transversal groove 15,5mm
EL-C0002 Clamping pallet U20 brass, width of transversal groove 20,5mm
EL-C0003 Clamping pallet U25 brass, width of transversal groove 25,5mm

Aluminium:

Item No.:

EL-D0001-1 Clamping pallet U10 aluminium, width of transversal groove 10,5mm
EL-D0001 Clamping pallet U15 aluminium, width of transversal groove 15,5mm
EL-D0002 Clamping pallet U20 aluminium, width of transversal groove 20,5mm
EL-D0003 Clamping pallet U25 aluminium, width of transversal groove 25,5mm

Stainless steel:

Item No.:

EL-B0001-1 Clamping pallet U10 stainless steel, width of transversal groove 10,5mm
EL-B0001 Clamping pallet U15 stainless steel, width of transversal groove 15,5mm
EL-B0002 Clamping pallet U20 stainless steel, width of transversal groove 20,5mm
EL-B0003 Clamping pallet U25 stainless steel, width of transversal groove 25,5mm

Different sizes of the clamping groove: 10,5mm, 15,5mm, 20,5mm, 25,5mm

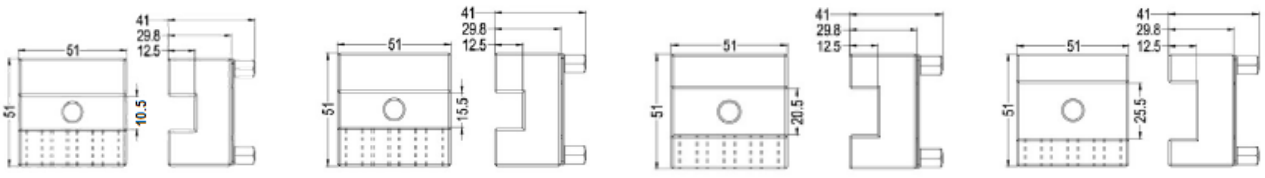

Erowa®, ITS® are registered Trade Marks of EROWA AG.
MACRO®, System 3R® are registered Trade Marks of System 3R International AB.

ELERO
Equipment for EDM
Potreby pre elektroeróziu

ELERO, s.r.o.
Považská Teplá 28
017 05 Považská Bystrica
Slovakia

Tel.: 00421 42 4331991-2
Mobile: 00421 907 411 787
Fax/Tel.: 00421 42 4331990
E-mail: elero@elero.sk www.elero.sk

Clamping systems compatible with EROW.A

Item No.:

EL-B0004 Clamping pallet U30 stainless steel, width of clamping groove 30,5mm
EL-B0041 Clamping pallet U35 stainless steel, width of clamping groove 35,5mm
EL-B0042 Clamping pallet U40 stainless steel, width of clamping groove 40,5mm
EL-B0043 Clamping pallet U45 stainless steel, width of clamping groove 45,5mm
EL-B0044 Clamping pallet U50 stainless steel, width of clamping groove 50,5mm



Different dimensions of clamping grooves: 30,5mm, 35,5mm, 40,5mm, 45,5mm, 50,5mm

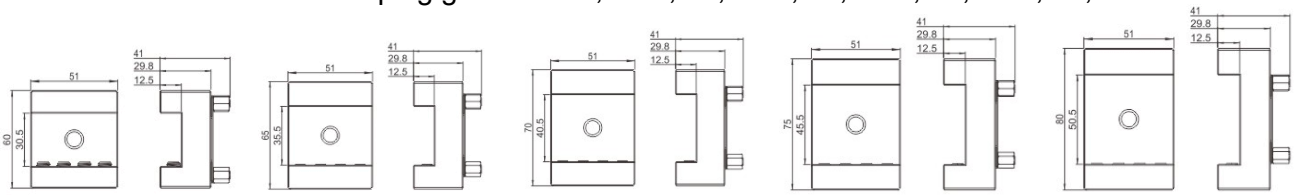

Clamping pallets Prisround ITS50, with hole

Brass:

Item No.:

EL-C0005-1 Clamping pallet S10 brass, hole 11,5x11,5mm
EL-C0005 Clamping pallet S15 brass, hole 16,5x16,5mm
EL-C0006 Clamping pallet S20 brass, hole 21,5x21,5mm
EL-C0007 Clamping pallet S25 brass, hole 26,5x26,5mm
EL-C0007-1 Clamping pallet S30 brass, hole 31,5x31,5mm



Aluminium:

Item No.:

EL-D0005-1 Clamping pallet S10 aluminium, hole 11,5x11,5mm
EL-D0005 Clamping pallet S15 aluminium, hole 16,5x16,5mm
EL-D0006 Clamping pallet S20 aluminium, hole 21,5x21,5mm
EL-D0007 Clamping pallet S25 aluminium, hole 26,5x26,5mm
EL-D0007-1 Clamping pallet S30 aluminium, hole 31,5x31,5mm

Stainless steel:

Item No.:

EL-B0005-1 Clamping pallet S10 stainless steel, hole 11,5x11,5mm
EL-B0005 Clamping pallet S15 stainless steel, hole 16,5x16,5mm
EL-B0006 Clamping pallet S20 stainless steel, hole 21,5x21,5mm
EL-B0007 Clamping pallet S25 stainless steel, hole 26,5x26,5mm
EL-B0008 Clamping pallet S30 stainless steel, hole 31,5x31,5mm

Different dimensions of clamping holes: 11,5x11,5, 16,5x16,5, 21,5x21,5, 26,5x26,5, 31,5x31,5mm

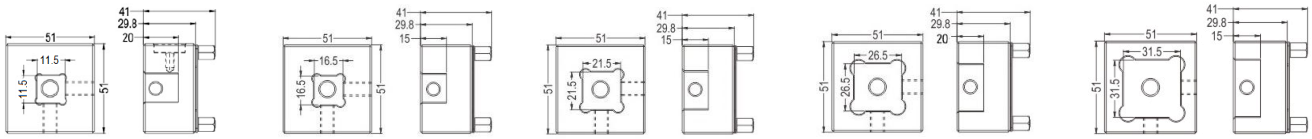

Erowa®, ITS® are registered Trade Marks of EROWA AG.
MACRO®, System 3R® are registered Trade Marks of System 3R International AB.

ELERO
Equipment for EDM
Potreby pre elektroeróziu

ELERO, s.r.o.
Považská Teplá 28
017 05 Považská Bystrica
Slovakia

Tel.: 00421 42 4331991-2
Mobile: 00421 907 411 787
Fax/Tel.: 00421 42 4331990
E-mail: elero@elero.sk www.elero.sk

Clamping systems compatible with EROW.A

Clamping pallets Uniplate, flat

Item No.:
EL-C0004 Clamping pallet 51x51mm brass ITS50, flat
EL-D0004 Clamping pallet 51x51mm aluminium ITS50, flat
EL-B0009 Clamping pallet 51x51mm stainless steel ITS50, flat

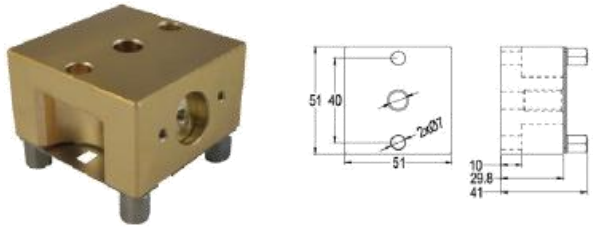

Item No.:
EL-C0008 Clamping pallet 81x51mm brass ITS50, flat
EL-B0010 Clamping pallet 81x51mm stainless steel ITS50, flat

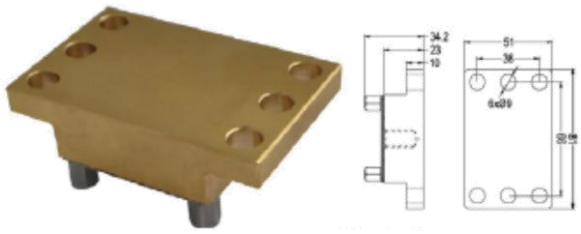

Item No..:
EL-B0010-A Clamping pallet 130x51mm stainless steel ITS100, flat

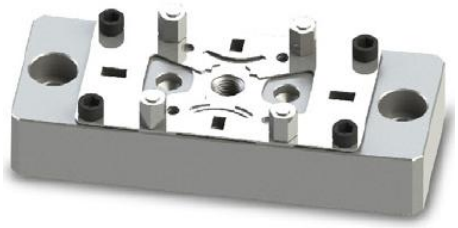

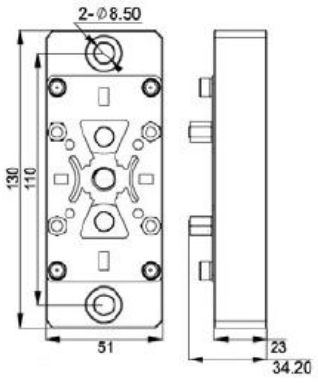

Item No.:
EL-B0011 Clamping pallet 150x92mm stainless steel ITS100, flat
For clamping extra large flat electrodes



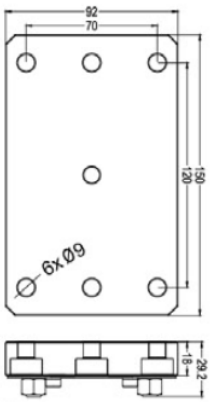

Erowa®, ITS® are registered Trade Marks of EROWA AG.
MACRO®, System 3R® are registered Trade Marks of System 3R International AB.

ELERO, s.r.o.
Považská Teplá 28
017 05 Považská Bystrica
Slovakia

Tel.: 00421 42 4331991-2
Mobile: 00421 907 411 787
Fax/Tel.: 00421 42 4331990
E-mail: elero@elero.sk www.elero.sk

Clamping systems compatible with EROW.A

Item No.:
EL-D0008 Clamping pallet 80x80mm aluminium ITS100, flat

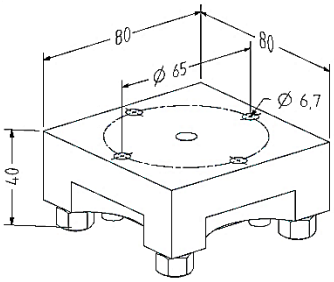



Item No.:
EL-D0009 Clamping pallet 80x80mm aluminium ITS100, with hole 50x50mm



Item No.:
EL-C010 Clamping pallet 51x51mm ITS50, brass, universal
EL-D010 Clamping pallet 51x51m m ITS50, aluminium, universal

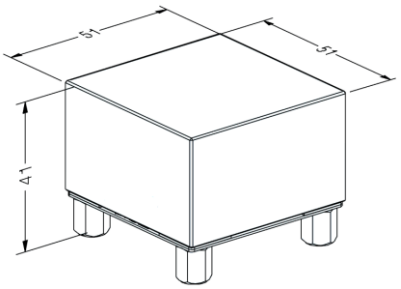

Item No.:
EL-C011 Clamping pallet ITS50 adjustable, brass

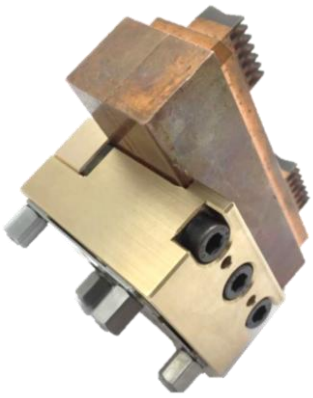



Erowa®, ITS® are registered Trade Marks of EROWA AG.
MACRO®, System 3R® are registered Trade Marks of System 3R International AB.

ELERO
Equipment for EDM
Potreby pre elektroeróziu

ELERO, s.r.o.
Považská Teplá 28
017 05 Považská Bystrica
Slovakia

Tel.: 00421 42 4331991-2
Mobile: 00421 907 411 787
Fax/Tel.: 00421 42 4331990
E-mail: elero@elero.sk www.elero.sk

Clamping systems compatible with EROW.A

Item No.: EL-V0008 Universal stainless adjustable holder 20x20mm~50x50mm, ITS100

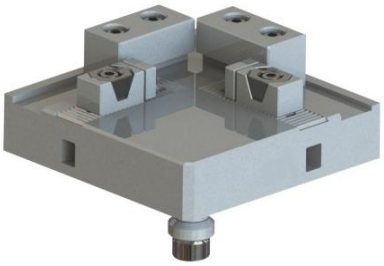

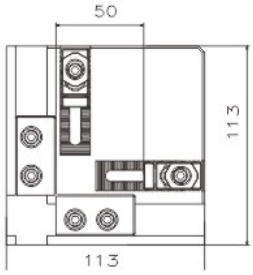

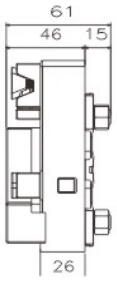

Item No.: EL-V0009 Universal stainless adjustable holder 25x50mm~50x100mm, ITS100

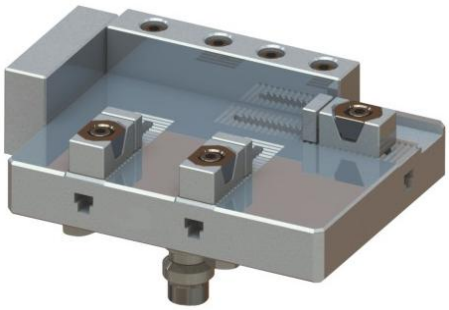

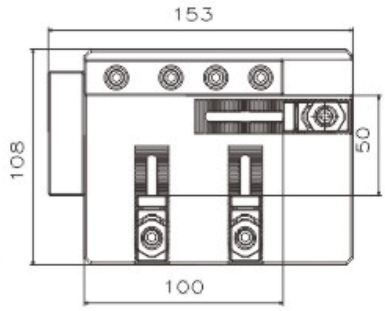

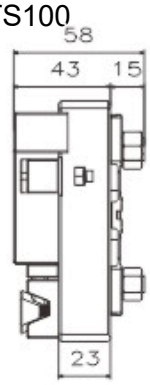

Item No.: EL-V0010 Universal stainless adjustable holder 50x50mm~100x100mm, ITS100

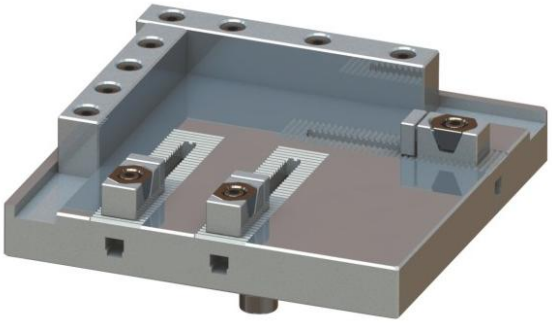

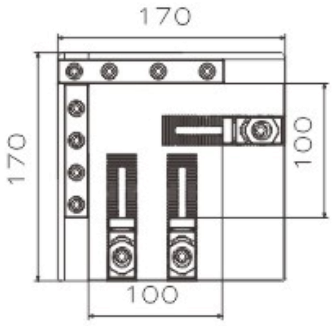

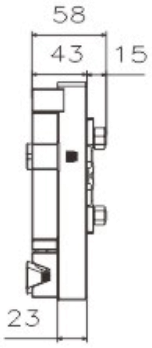

Item No.: EL-V0011 Universal stainless adjustable holder 100x100mm~150x150mm, ITS100

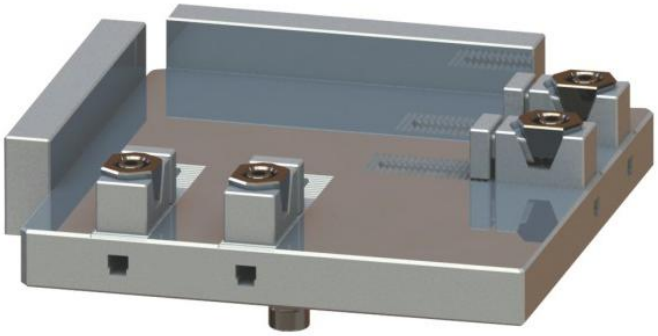

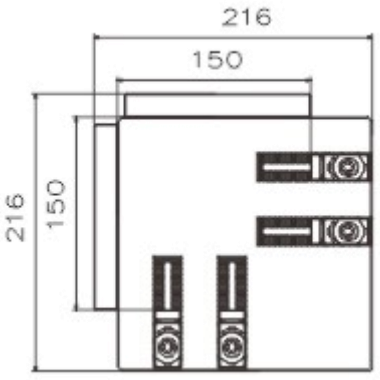

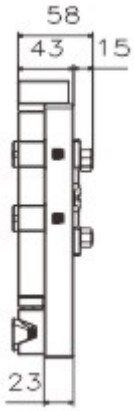

Erowa®, ITS® are registered Trade Marks of EROWA AG.
MACRO®, System 3R® are registered Trade Marks of System 3R International AB.

ELERO
Equipment for EDM
Potreby pre elektroeróziu

ELERO, s.r.o.
Považská Teplá 28
017 05 Považská Bystrica
Slovakia

Tel.: 00421 42 4331991-2
Mobile: 00421 907 411 787
Fax/Tel.: 00421 42 4331990
E-mail: elero@elero.sk www.elero.sk

Clamping systems compatible with EROW.A

Item No.: EL-V0012 Universal stainless adjustable holder 25x100mm~50x200mm, ITS100

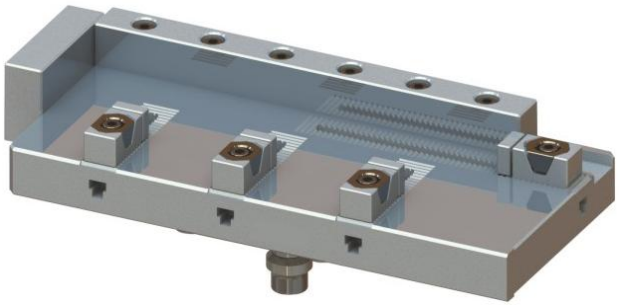

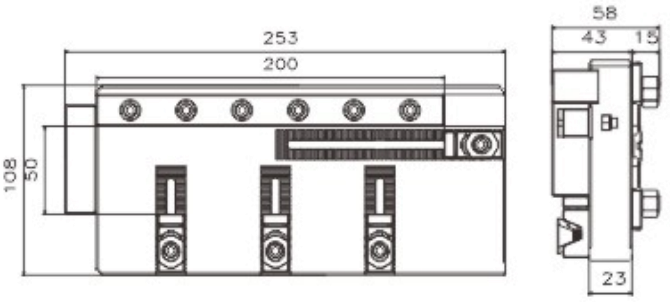

Item No.: EL-V0013 Universal adjustable stainless prism holder Ø20~60mm , ITS100

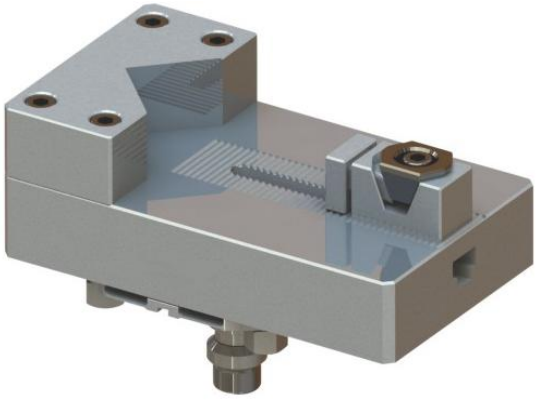

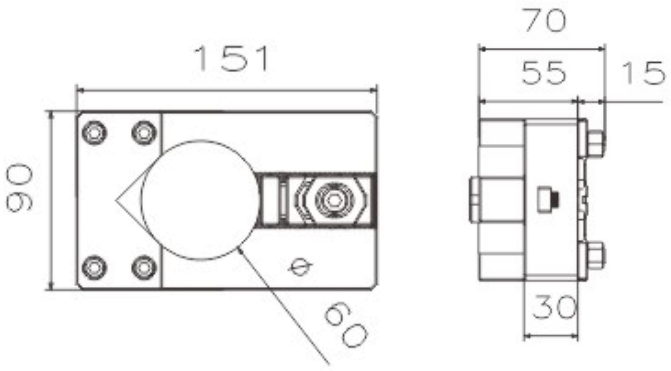

Item No.: EL-V0014 Universal stainless holder 222x145x37mm , ITS100

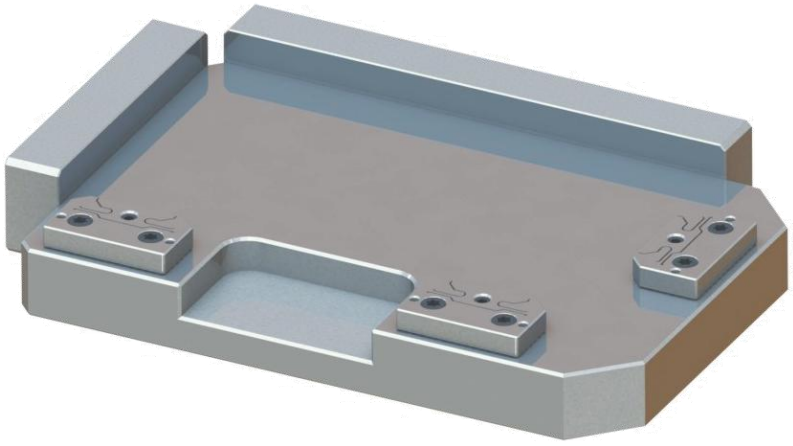

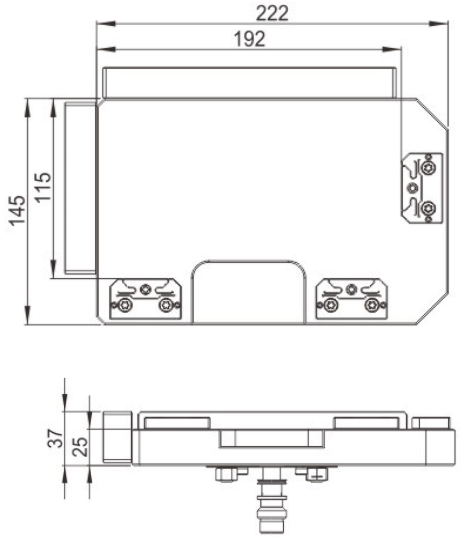

Erowa®, ITS® are registered Trade Marks of EROWA AG.
MACRO®, System 3R® are registered Trade Marks of System 3R International AB.

ELERO, s.r.o.
Považská Teplá 28
017 05 Považská Bystrica
Slovakia

Tel.: 00421 42 4331991-2
Mobile: 00421 907 411 787
Fax/Tel.: 00421 42 4331990
E-mail: elero@elero.sk www.elero.sk

Clamping systems compatible with EROW.A

Item No.:
EL-A0001 Centering plates of clamping system ITS, size 50 – 2pcs, including screws 4pcs/set

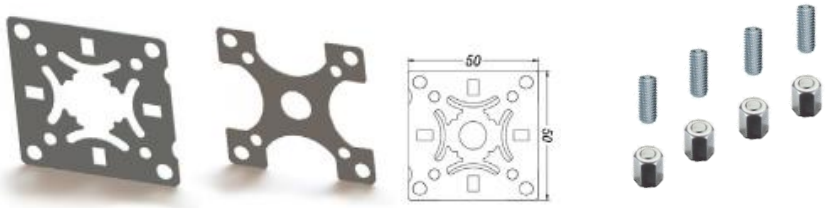

Item No.:
EL-A0002 Centering plates of clamping system ITS, size 100 – 2pcs, including screws 4+4 pcs/set

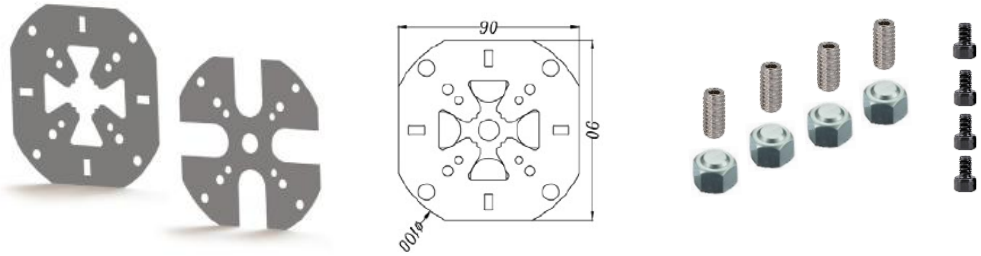

Item No.:
EL-A0003 Centering G plate, including screws 4pcs/plate

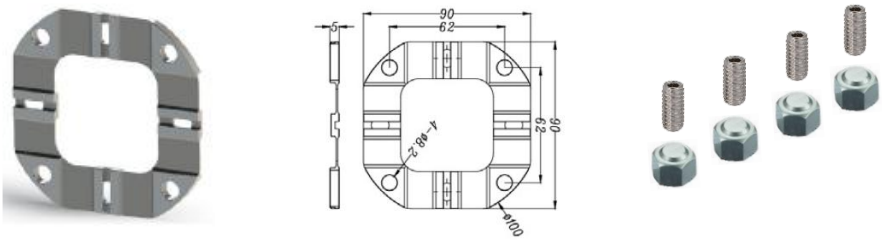

Item No.:
EL-A0004 Centering plates 50x100, including screws 4+4 pcs/set

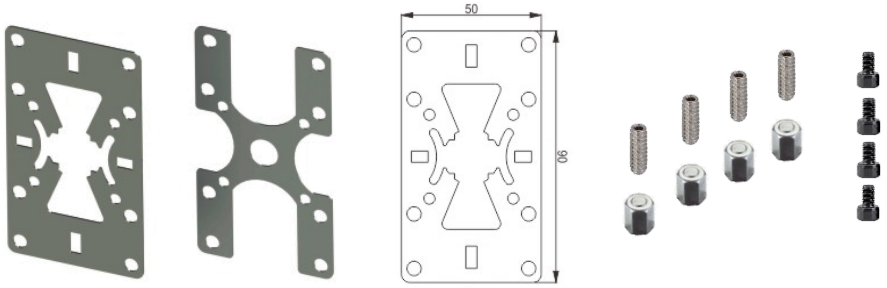

Erowa®, ITS® are registered Trade Marks of EROWA AG.
MACRO®, System 3R® are registered Trade Marks of System 3R International AB.

ELERO
Equipment for EDM
Potreby pre elektroeróziu

ELERO, s.r.o.
Považská Teplá 28
017 05 Považská Bystrica
Slovakia

Tel.: 00421 42 4331991-2
Mobile: 00421 907 411 787
Fax/Tel.: 00421 42 4331990
E-mail: elero@elero.sk www.elero.sk

Clamping systems compatible with EROW.A

Item No.:
EL-Q0004 Spigot ITS
Suitable also for the automatic exchange with internal flushing hole



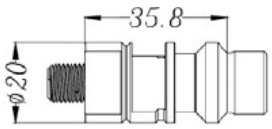

Item No :
EL-Q0013 Replacing ring for automatic spigots ITS



Item No.:
EL-Q0001 Electronic chip





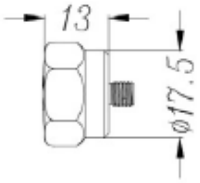

Item No.: EL-K0010 Manual quick chuck ITS100, clamping force 10 000 N. Suitable for lathe, milling machines, machining centre, grinding machines, EDM wire cutters or EDM die-sinking machines... .

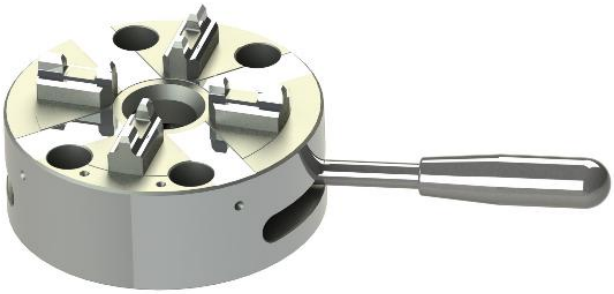

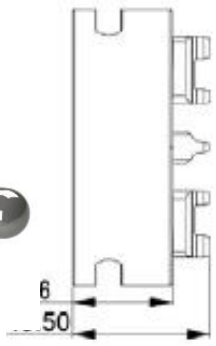



Erowa®, ITS® are registered Trade Marks of EROWA AG.
MACRO®, System 3R® are registered Trade Marks of System 3R International AB.

ELERO, s.r.o.
Považská Teplá 28
017 05 Považská Bystrica
Slovakia

Tel.: 00421 42 4331991-2
Mobile: 00421 907 411 787
Fax/Tel.: 00421 42 4331990
E-mail: elero@elero.sk www.elero.sk

Clamping systems compatible with EROW.A

Item No..: EL-K0011 Manual quick chuck ITS100 with base, clamping force 10 000N.
Suitable for milling machines, machining centre, grinding machines, die sinking EDM,

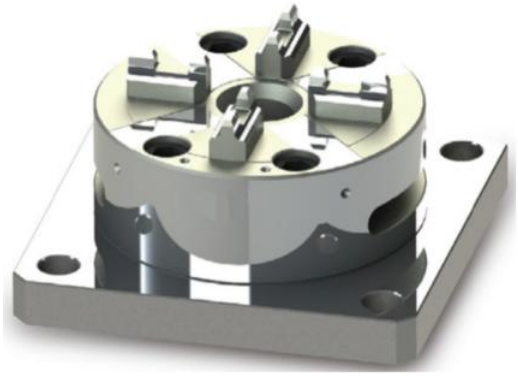

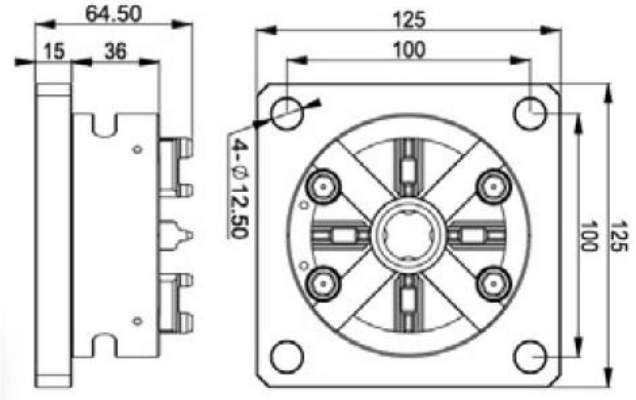

Item No..: EL-K0012 Manual quick chuck ITS100 with base, clamping force 10 000N.
Suitable for milling machines, machining centre, grinding machines, die sinking EDM,



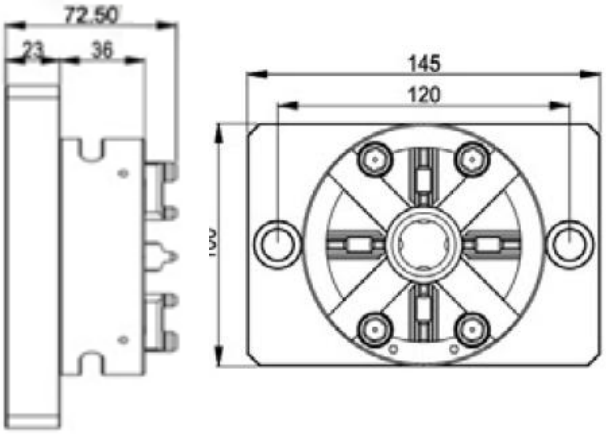

Item No.: EL-K0013 Manual quick chuck ITS100 with base, clamping force 10 000N.
Suitable for die sinking EDM



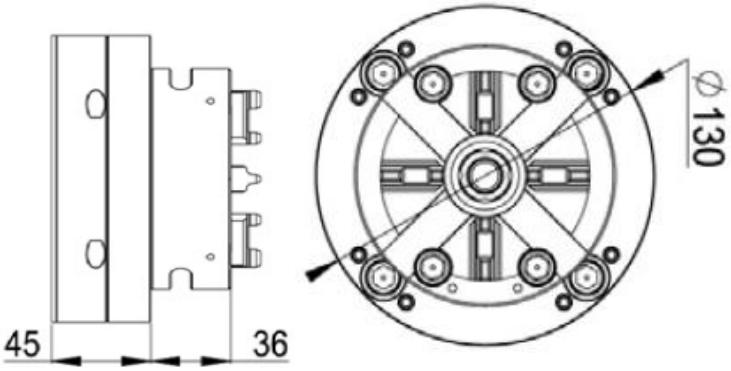

Erowa®, ITS® are registered Trade Marks of EROWA AG.
MACRO®, System 3R® are registered Trade Marks of System 3R International AB.

ELERO
Equipment for EDM
Potreby pre elektroeróziu

ELERO, s.r.o.
Považská Teplá 28
017 05 Považská Bystrica
Slovakia

Tel.: 00421 42 4331991-2
Mobile: 00421 907 411 787
Fax/Tel.: 00421 42 4331990
E-mail: elero@elero.sk www.elero.sk

Clamping systems compatible with EROW.A

Item No.: EL-K0014
Vertical manual quick chuck ITS100, clamping force 10 000N.

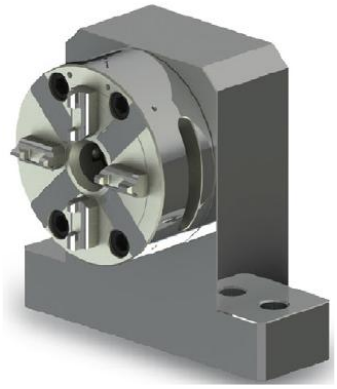

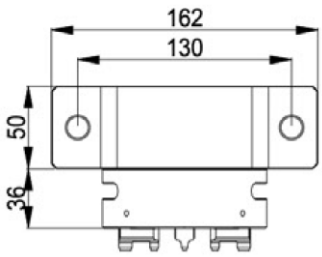

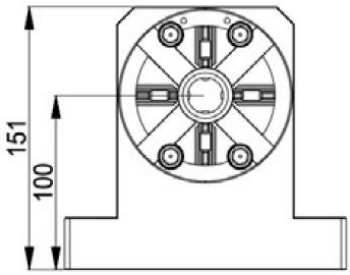

Item No.: EL-K0015
Horizontal and vertical manual quick chuck ITS100, clamping force 10 000N.

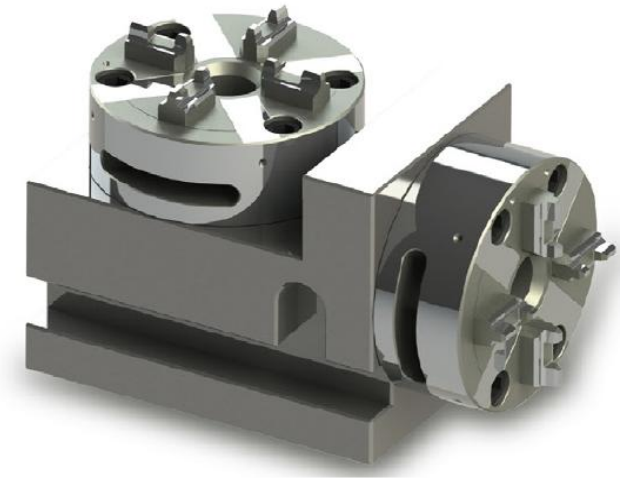

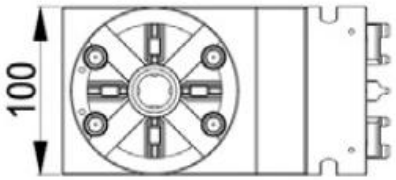

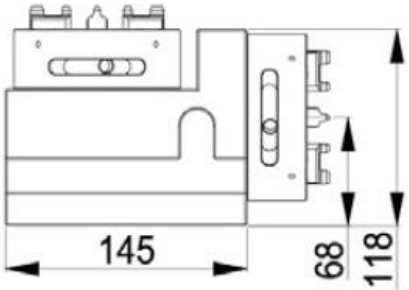

Item No.: EL-K0016 Workholding plate with 2 manual quick chucks ITS100



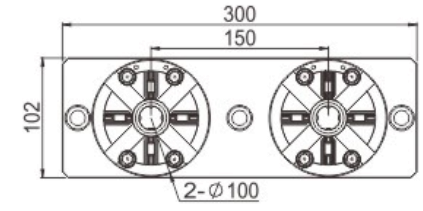

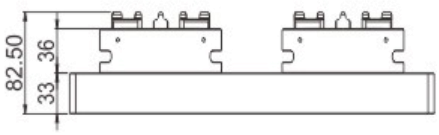

Erowa®, ITS® are registered Trade Marks of EROWA AG.
MACRO®, System 3R® are registered Trade Marks of System 3R International AB.

ELERO
Equipment for EDM
Potreby pre elektroeróziu

ELERO, s.r.o.
Považská Teplá 28
017 05 Považská Bystrica
Slovakia

Tel.: 00421 42 4331991-2
Mobile: 00421 907 411 787
Fax/Tel.: 00421 42 4331990
E-mail: elero@elero.sk www.elero.sk

Clamping systems compatible with EROW.A

Item No..: EL-K0017 Workholding plate with 3 manual quick chucks ITS100

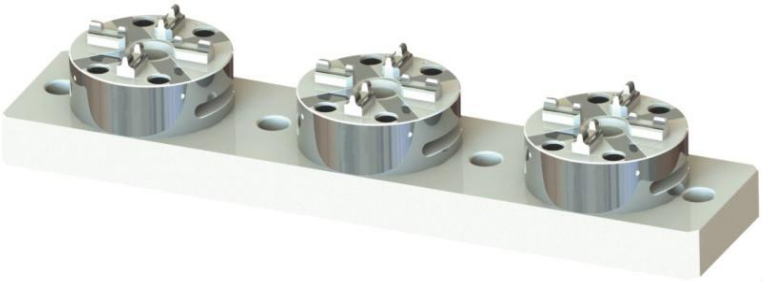

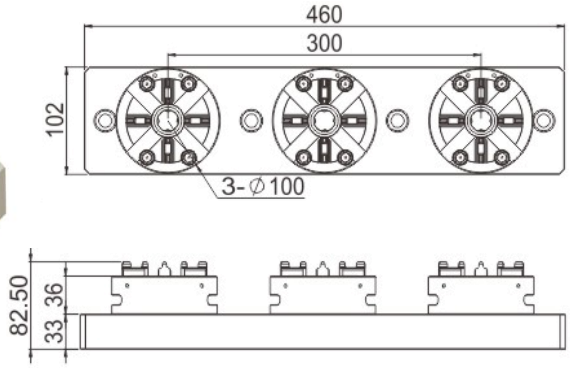

Item No.: EL-K0018 Workholding plate with 4 manual quick chucks ITS100
Item No.:



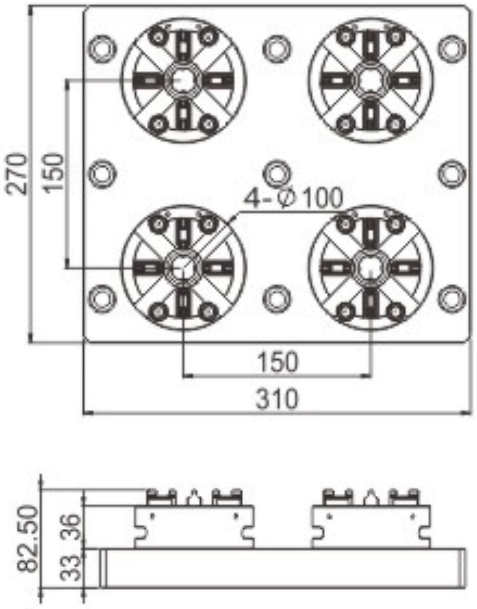

EL-K0019 Workholding plate with 6 manual quick chucks ITS100

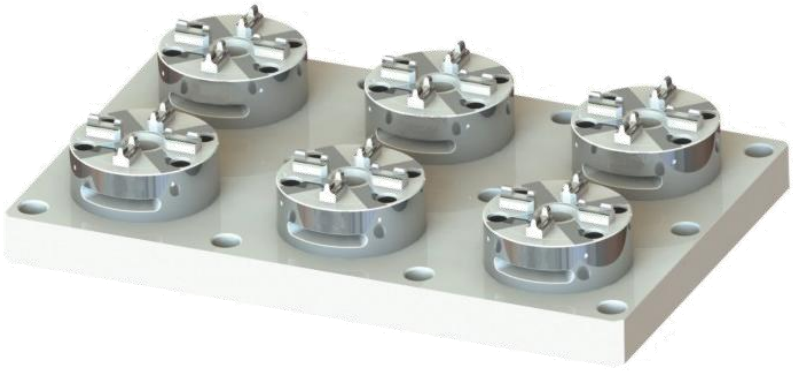

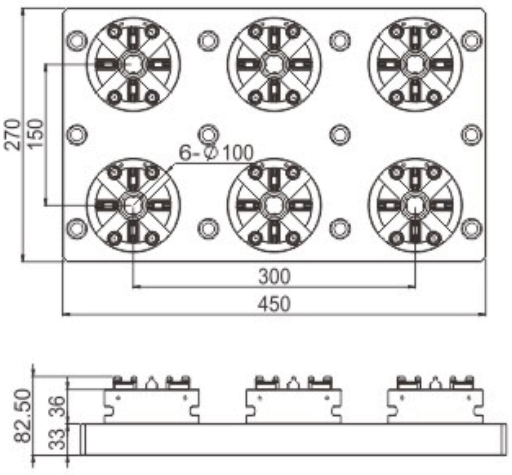

Erowa®, ITS® are registered Trade Marks of EROWA AG.
MACRO®, System 3R® are registered Trade Marks of System 3R International AB.

ELERO
Equipment for EDM
Potreby pre elektroeróziu

ELERO, s.r.o.
Považská Teplá 28
017 05 Považská Bystrica
Slovakia

Tel.: 00421 42 4331991-2
Mobile: 00421 907 411 787
Fax/Tel.: 00421 42 4331990
E-mail: elero@elero.sk www.elero.sk

Clamping systems compatible with EROW.A

Item No.:
EL-K0080 80mm square manual quick chuck ITS100



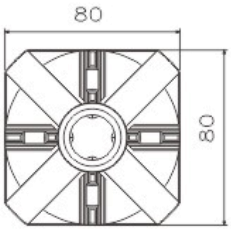

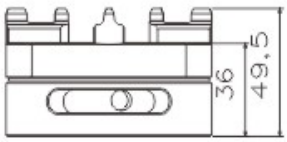

Item No.:
EL-K0090 90mm square manual quick chuck ITS100



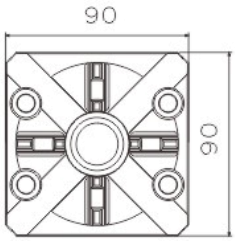

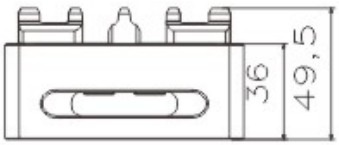

Erowa®, ITS® are registered Trade Marks of EROWA AG.
MACRO®, System 3R® are registered Trade Marks of System 3R International AB.

ELERO, s.r.o.
Považská Teplá 28
017 05 Považská Bystrica
Slovakia

Tel.: 00421 42 4331991-2
Mobile: 00421 907 411 787
Fax/Tel.: 00421 42 4331990
E-mail: elero@elero.sk www.elero.sk

Clamping systems compatible with EROW.A

Item No.: EL-S0001
Manual chuck ITS50, clamping force 45000N.



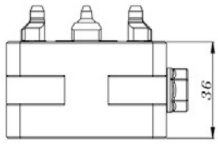

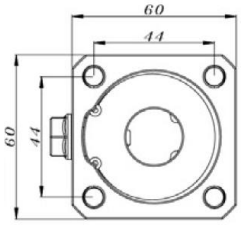

Item No.: EL-L0001
Manual quick chuck ITS50, clamping force 4000N.



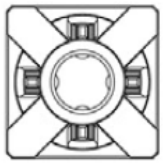

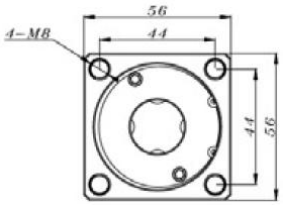

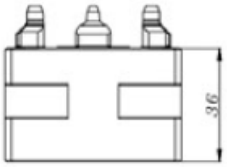

Item No.: EL-S0002
Workholding plate with 3 manual chucks ITS50, clamping force 4500N.



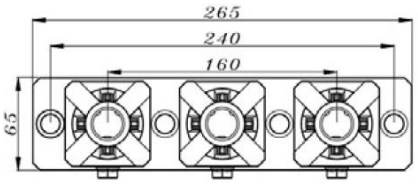

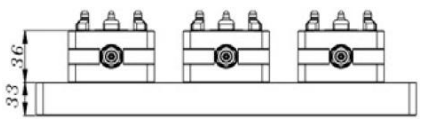

Erowa®, ITS® are registered Trade Marks of EROWA AG.
MACRO®, System 3R® are registered Trade Marks of System 3R International AB.

ELERO
Equipment for EDM
Potreby pre elektroeróziu

ELERO, s.r.o.
Považská Teplá 28
017 05 Považská Bystrica
Slovakia

Tel.: 00421 42 4331991-2
Mobile: 00421 907 411 787
Fax/Tel.: 00421 42 4331990
E-mail: elero@elero.sk www.elero.sk

Clamping systems compatible with EROW.A

Item No.: EL-S0003

Workholding plate with 6 manual chucks ITS50, clamping force 4500N.

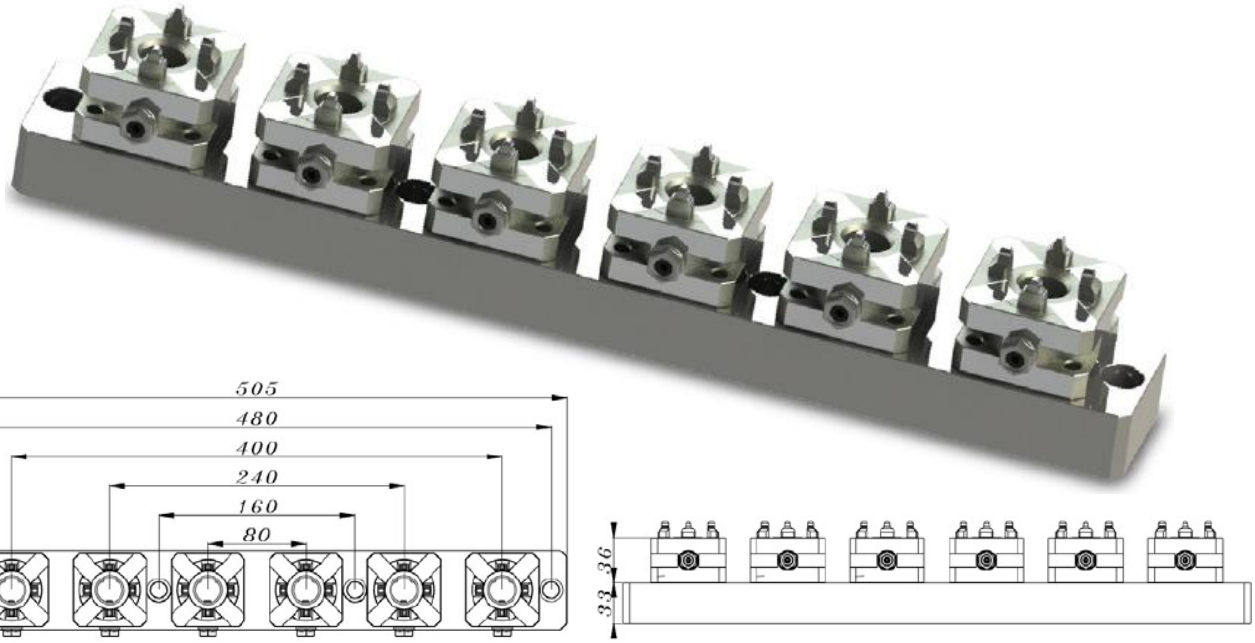

Item No.: EL-L0003

Manual quick chuck ITS50 with extension arm, clamping force 4000N.

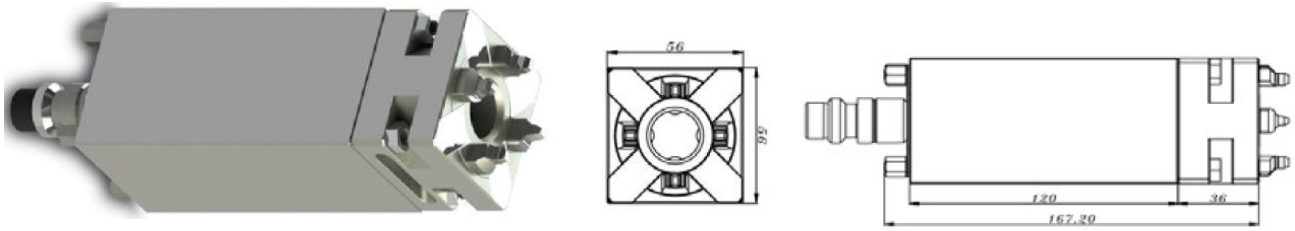

Item No.: EL-L0005

Vertical manual quick chuck ITS50, clamping force 4000N.

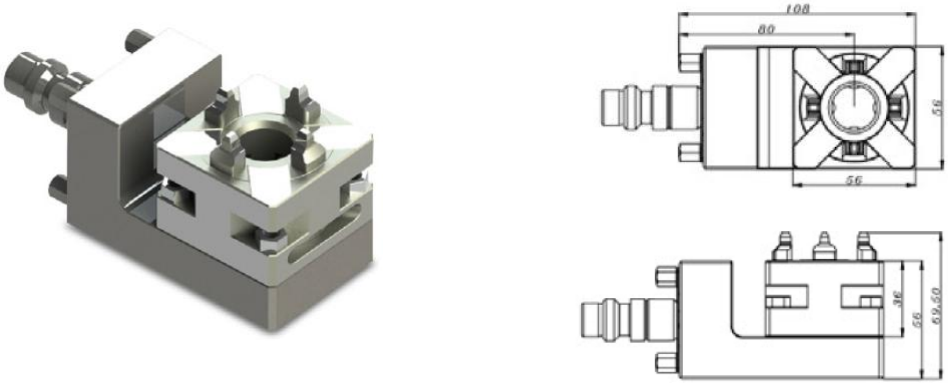

Erowa®, ITS® are registered Trade Marks of EROWA AG.
MACRO®, System 3R® are registered Trade Marks of System 3R International AB.

ELERO
Equipment for EDM
Potreby pre elektroeróziu

ELERO, s.r.o.
Považská Teplá 28
017 05 Považská Bystrica
Slovakia

Tel.: 00421 42 4331991-2
Mobile: 00421 907 411 787
Fax/Tel.: 00421 42 4331990
E-mail: elero@elero.sk www.elero.sk

Clamping systems compatible with EROW.A

Item No.: EL-L0003/150
Manual quick chuck ITS50,
with extension rod 150mm, clamping force 4000N



Item No.: EL-L0003/250
Manual quick chuck ITS50,
with extension rod 250mm, clamping force 4000N



Item. No.:
EL-L0007 Manual quick chuck ITS50 on extension rod, clamping force 4000N

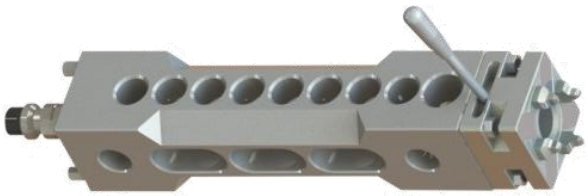

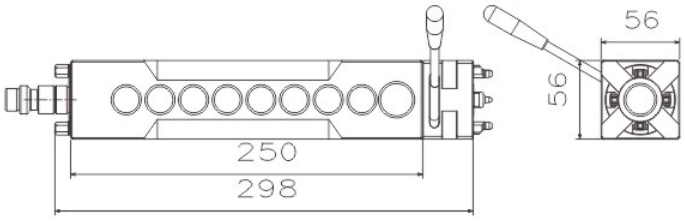

Item No.:
EL-L0008 Manual quick chuck ITS50 on extension rod, clamping force 4000N

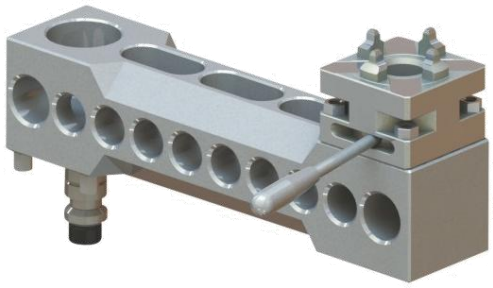

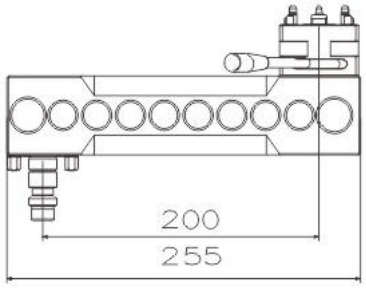

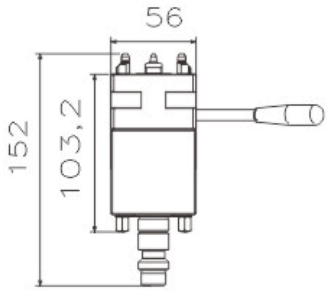

Item No.: EL-L0006
Manual quick chuck ITS50 with connection rod Ø20mm, clamping force 4000N.

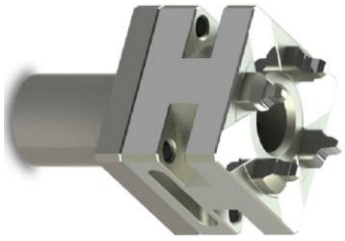

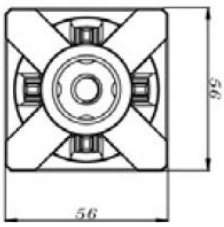

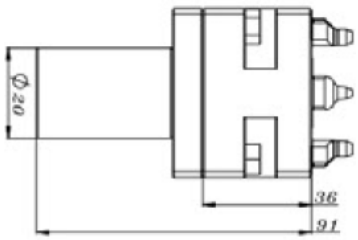

Erowa®, ITS® are registered Trade Marks of EROWA AG.
MACRO®, System 3R® are registered Trade Marks of System 3R International AB.

ELERO
Equipment for EDM
Potreby pre elektroeróziu

ELERO, s.r.o.
Považská Teplá 28
017 05 Považská Bystrica
Slovakia

Tel.: 00421 42 4331991-2
Mobile: 00421 907 411 787
Fax/Tel.: 00421 42 4331990
E-mail: elero@elero.sk www.elero.sk

Clamping systems compatible with EROW.A

Item No.: EL-G0001

Pneumatic chuck ITS100, with base, clamping force 10 000N.
Suitable for milling machines, machining centre, grinding machines, EDM wire cutters or EDM die-sinking machines.



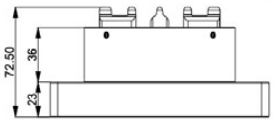

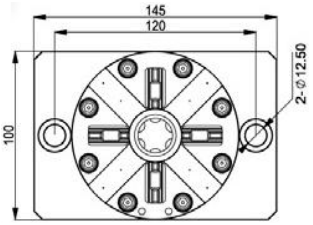

Item No.: EL-G0002

Pneumatic chuck ITS100, with base, clamping force 10 000N.
Suitable for die-sinking EDM



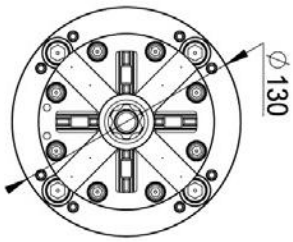

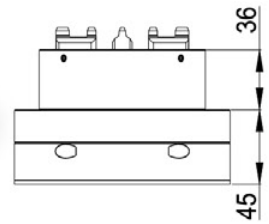

Item No.: EL-G0003

Pneumatic chuck ITS100, with base, clamping force 10 000N.
Suitable for milling machines, machining centre, grinding machines, EDM wire cutters or EDM die-sinking machines.



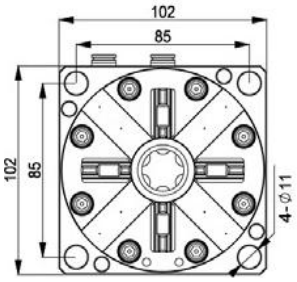

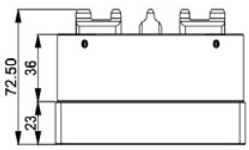

Erowa®, ITS® are registered Trade Marks of EROWA AG.
MACRO®, System 3R® are registered Trade Marks of System 3R International AB.

ELERO, s.r.o.
Považská Teplá 28
017 05 Považská Bystrica
Slovakia

Tel.: 00421 42 4331991-2
Mobile: 00421 907 411 787
Fax/Tel.: 00421 42 4331990
E-mail: elero@elero.sk www.elero.sk

Clamping systems compatible with EROW.A

Item No.: EL-R0001

D150mm pneumatic chuck ITS100, with base, clamping force 15 000N.



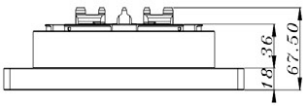

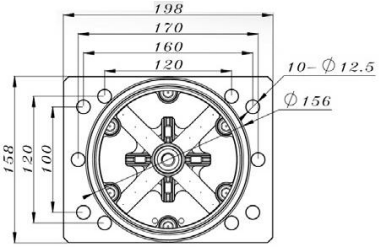

Item No.: EL-G0004

Workholding plate with 2 pneumatic chucks ITS100, clamping force 10 000N.

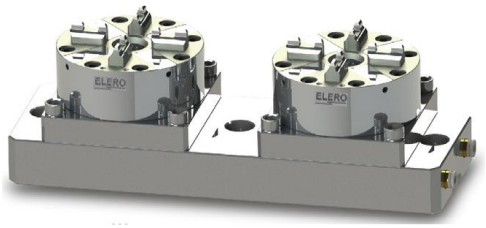

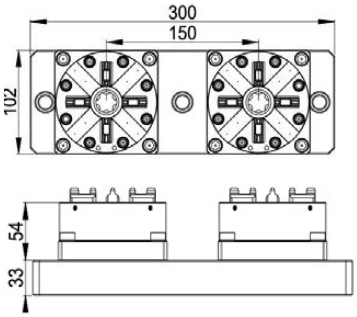

Item No.: EL-G0005

Workholding plate with 3 pneumatic chucks ITS100, clamping force 10 000N.



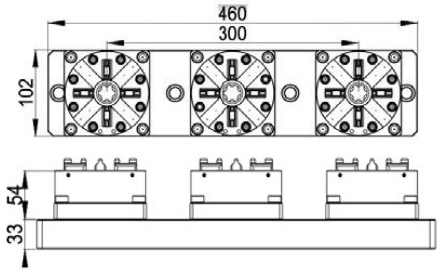

Item No.: EL-G0006

Workholding plate with 4 pneumatic chucks ITS100, clamping force 10 000N.

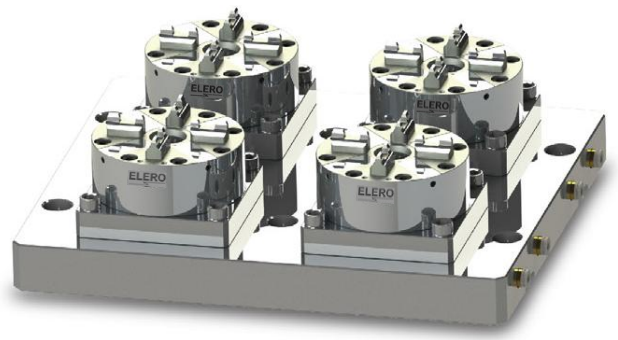

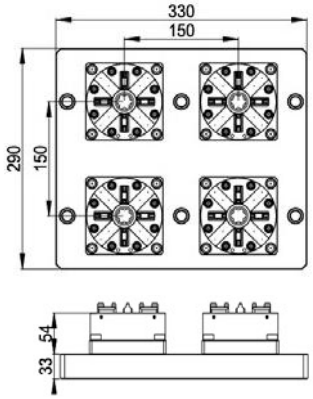

Erowa®, ITS® are registered Trade Marks of EROWA AG.
MACRO®, System 3R® are registered Trade Marks of System 3R International AB.

ELERO
Equipment for EDM
Potreby pre elektroeróziu

ELERO, s.r.o.
Považská Teplá 28
017 05 Považská Bystrica
Slovakia

Tel.: 00421 42 4331991-2
Mobile: 00421 907 411 787
Fax/Tel.: 00421 42 4331990
E-mail: elero@elero.sk www.elero.sk

Clamping systems compatible with EROW.A

Item No.: EXP-G0007

Workholding plate with 6 pneumatic chucks ITS100, clamping force 10 000N.

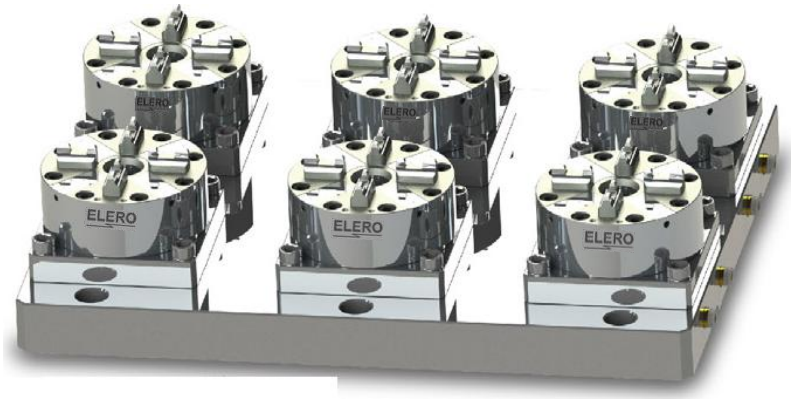

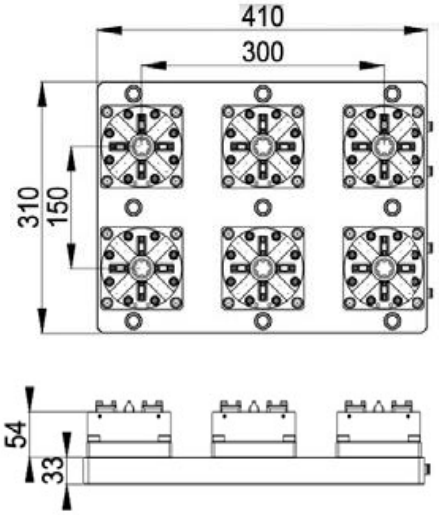

Item No.: EXP-G0008

Workholding plate with 9 pneumatic chucks ITS100, clamping force 10 000N.

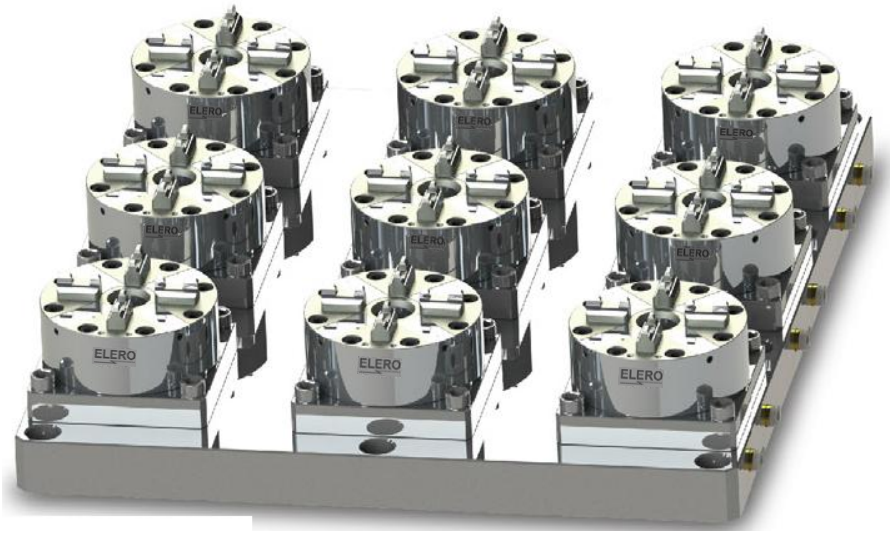

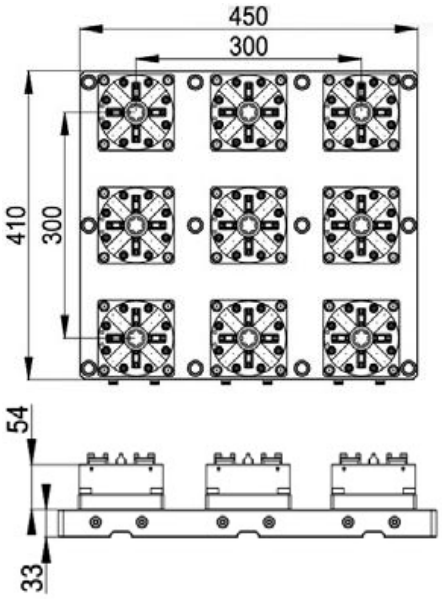

Erowa®, ITS® are registered Trade Marks of EROWA AG.
MACRO®, System 3R® are registered Trade Marks of System 3R International AB.

ELERO
Equipment for EDM
Potreby pre elektroeróziu

ELERO, s.r.o.
Považská Teplá 28
017 05 Považská Bystrica
Slovakia

Tel.: 00421 42 4331991-2
Mobile: 00421 907 411 787
Fax/Tel.: 00421 42 4331990
E-mail: elero@elero.sk www.elero.sk

Clamping systems compatible with EROW.A

Item No.: EXP-G0009
Vertical pneumatic chuck ITS100, clamping force 10 000N.

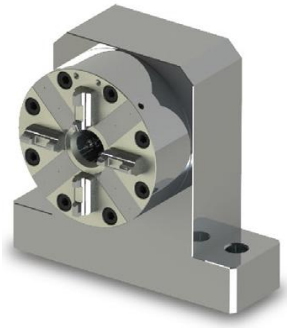

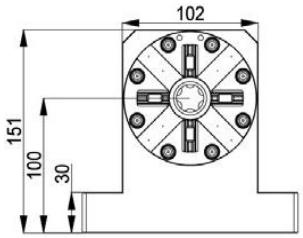

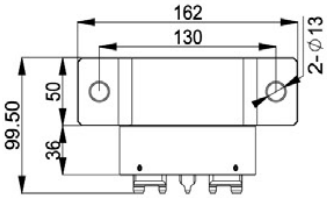

Item No.: EXP-G0010
Horizontal and vertical pneumatic chuck ITS100, clamping force 10 000N.

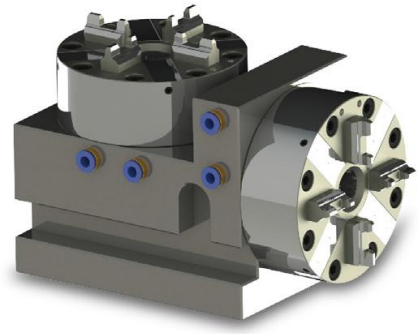

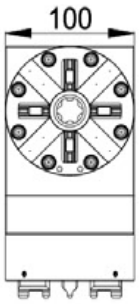

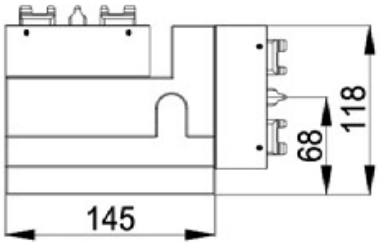

Item No.: EL-E0001
80mm square pneumatic chuck ITS100, clamping force 7000N.



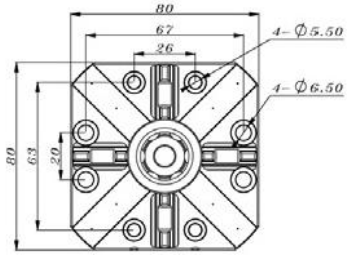

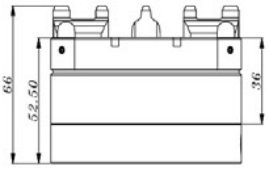

Erowa®, ITS® are registered Trade Marks of EROWA AG.
MACRO®, System 3R® are registered Trade Marks of System 3R International AB.

ELERO, s.r.o.
Považská Teplá 28
017 05 Považská Bystrica
Slovakia

Tel.: 00421 42 4331991-2
Mobile: 00421 907 411 787
Fax/Tel.: 00421 42 4331990
E-mail: elero@elero.sk www.elero.sk

Clamping systems compatible with EROW.A

Item No.: EL-E0005
80mm square pneumatic chuck ITS100, with base, clamping force 7000N.



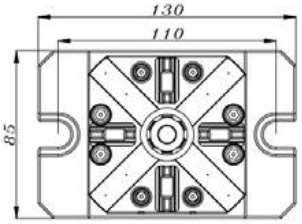

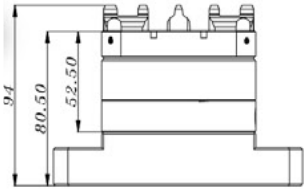

Item No.: EL-E0008
80mm square pneumatic chuck ITS100, with base, clamping force 7000N.



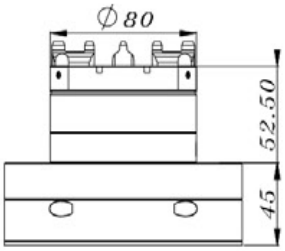

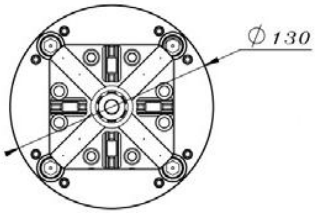

Item No.: EL-E0009 80mm square pneumatic chuck ITS100, with connection rod 25mm, clamping force 7000N.



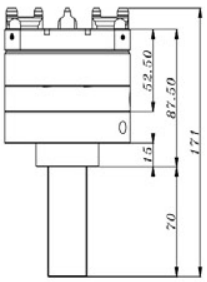

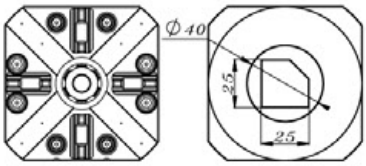

Erowa®, ITS® are registered Trade Marks of EROWA AG.
MACRO®, System 3R® are registered Trade Marks of System 3R International AB.

ELERO, s.r.o.
Považská Teplá 28
017 05 Považská Bystrica
Slovakia

Tel.: 00421 42 4331991-2
Mobile: 00421 907 411 787
Fax/Tel.: 00421 42 4331990
E-mail: elero@elero.sk www.elero.sk

Clamping systems compatible with EROW.A

Item No.: EL-F0002

Thin workholding plate with 4 pneumatic chucks ITS50, clamping force 6000N.



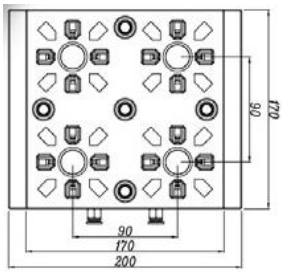

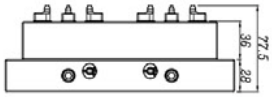

Item No.: EL-F0003

Thin workholding plate with 6 pneumatic chucks ITS50, clamping force 6000N.



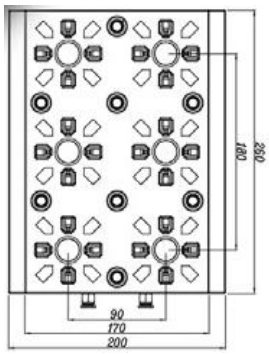

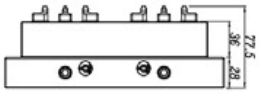

Item No.: EL-F0001

Thin workholding plate with 9 pneumatic chucks ITS50, clamping force 6000N.



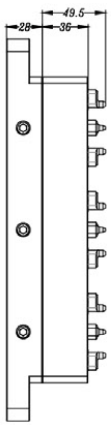

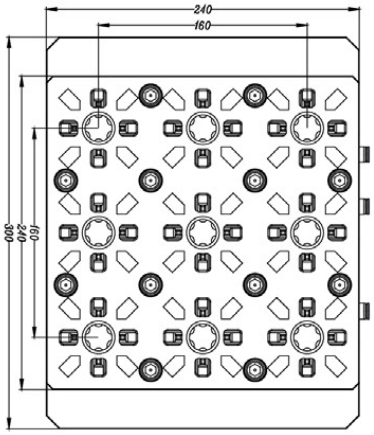

Erowa®, ITS® are registered Trade Marks of EROWA AG.
MACRO®, System 3R® are registered Trade Marks of System 3R International AB.

ELERO
Equipment for EDM
Potreby pre elektroeróziu

ELERO, s.r.o.
Považská Teplá 28
017 05 Považská Bystrica
Slovakia

Tel.: 00421 42 4331991-2
Mobile: 00421 907 411 787
Fax/Tel.: 00421 42 4331990
E-mail: elero@elero.sk www.elero.sk

Clamping systems compatible with EROW.A

Item No.: EL-Q0017 Pneumatic switch for pneumatic chucks control (suitable for EDM)



Item No.: EL-Q0018 Pneumatic switch for pneumatic chucks control (suitable for CNC machines)



Item No.: EL-Q0020 Pneumatic regulator



Item No.: EL-Q0019 Pneumatic hose



Erowa®, ITS® are registered Trade Marks of EROWA AG.
MACRO®, System 3R® are registered Trade Marks of System 3R International AB.

ELERO, s.r.o.
Považská Teplá 28
017 05 Považská Bystrica
Slovakia

Tel.: 00421 42 4331991-2
Mobile: 00421 907 411 787
Fax/Tel.: 00421 42 4331990
E-mail: elero@elero.sk www.elero.sk

Clamping systems compatible with EROW.A

Item No.: EL-3M0014A Reduction from EROW.A to 3-R with manual quick chuck.



Item No.: EL-3M0014B Reduction from EROW.A to 3-R with manual quick chuck.



Item No.: EL-Q0023A Reduction from 3-R to EROW.A ITS100 with manual quick chuck.



Item No.: EL-Q0023B Reduction from 3-R to EROW.A ITS50 with manual quick chuck.



Erowa®, ITS® are registered Trade Marks of EROWA AG.
MACRO®, System 3R® are registered Trade Marks of System 3R International AB.

ELERO, s.r.o.
Považská Teplá 28
017 05 Považská Bystrica
Slovakia

Tel.: 00421 42 4331991-2
Mobile: 00421 907 411 787
Fax/Tel.: 00421 42 4331990
E-mail: elero@elero.sk www.elero.sk

Clamping systems compatible with EROW.A

Item No.: EL-M0003 ER32 Collet holder ITS50, for collets ER32, D2 ~ D20mm

ER32

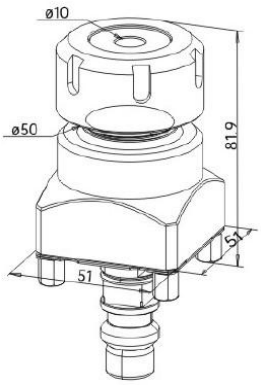



Item No.: EL-M0003/16 ER16 collet holder ITS50, for collets ER16, D0,5 ~ D10mm

ER16

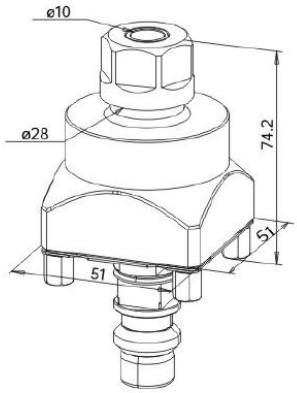



Item No.: EL-M0003/40 ER40 collet holder ITS50, for collets ER40, D3 ~ D26mm

ER40

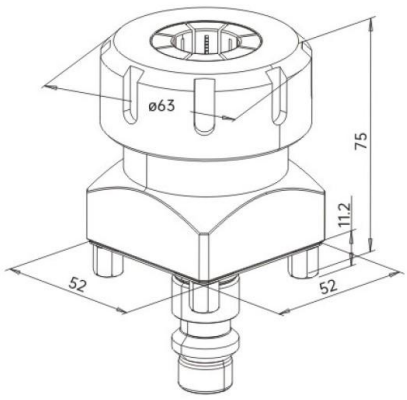



Erowa®, ITS® are registered Trade Marks of EROWA AG.
MACRO®, System 3R® are registered Trade Marks of System 3R International AB.

ELERO, s.r.o.
Považská Teplá 28
017 05 Považská Bystrica
Slovakia

Tel.: 00421 42 4331991-2
Mobile: 00421 907 411 787
Fax/Tel.: 00421 42 4331990
E-mail: elero@elero.sk www.elero.sk

Clamping systems compatible with EROW.A

Item No.:
ER32-UM/62252-02/NH-ER32B Replacement nut of collet holder EL-M0003 for collets



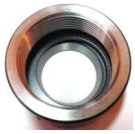

Item No.:ETS32-UM Replacement nut of collet holder EL-M0003 for collets ETS32




Item No.: 62179-01/ER32SET1
Set of high-precision collets ER32,18 pcs
of collets capable clamping the diameters
from Ø2 to Ø20mm, in a carry case + key.
Also possible to order only single
high-precision collet.



Item No.: 62173-01/ER16SET1
Set of high-precision collets ER16,10 pcs of collets capable
Clamping diameters from Ø0,5 to Ø10mm.
Also possible to order only single
high-precision collet.



Item No.: 62181-01/ER40SET1
Set of high-precision collets ER40,23 pcs
of collets capable clamping the diameters
from Ø3 to Ø 26mm, in a carry case + key.
Also possible to order only single
high-precision collet



Erowa®, ITS® are registered Trade Marks of EROWA AG.
MACRO®, System 3R® are registered Trade Marks of System 3R International AB.

ELERO, s.r.o.
Považská Teplá 28
017 05 Považská Bystrica
Slovakia

Tel.: 00421 42 4331991-2
Mobile: 00421 907 411 787
Fax/Tel.: 00421 42 4331990
E-mail: elero@elero.sk www.elero.sk

Clamping systems compatible with EROW.A

Item No.: 62120-02/C20-ER16-100

Mini collet chuck holder for collets ER16 with 20mm shank.
Suitable for clamping of tube electrodes

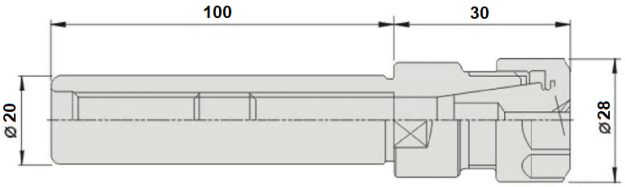



Item No.:

62172-101 High precision collet ER16, Φ1-0,5mm
62172-102 High precision collet ER16, Φ1,5-1mm
62172-103 High precision collet ER16, Φ2-1mm
62172-104 High precision collet ER16, Φ3-2mm
62172-105 High-precision collet ER16, Φ4-3mm
62172-106 High-precision collet ER16, Φ5-4mm
62172-107 High-precision collet ER16, Φ6-5mm
62172-108 High-precision collet ER16, Φ7-6mm
62172-109 High-precision collet ER16, Φ8-7mm
62172-110 High-precision collet ER16, Φ9-8mm
62172-111 High-precision collet ER16, Φ10-9mm



Item No.:

C-ER16/0,1-0,5mm Seal for tube elect. 0,10-0,50mm for collets ER16
C-ER16/0,6-1,0mm Seal for tube elect. 0,60-1,00mm for collets ER16
C-ER16/1,1-1,5mm Seal for tube elect. 1,10-1,50mm for collets ER16
C-ER16/1,6-2,0mm Seal for tube elect. 1,60-2,00mm for collets ER16
C-ER16/2,1-2,5mm Seal for tube elect. 2,10-2,50mm for collets ER16
C-ER16/2,6-3,0mm Seal for tube elect 2,60-3,00mm for collets ER16
C-ER16/3,1-4,0mm Seal for tube elect. 3,10-4,00mm for collets ER16
C-ER16/4,1-5,0mm Seal for tube elect 4,10-5,00mm for collets ER16
C-ER16/5,1-6,0mm Seal for tube elect 5,10-6,00mm for collets ER16



Method of tube and round electrode clamping in the collet holders



→ **M0003** Collet holder ITS50, for ER32 collets, D2 ~ D20

With the high precision collet set 62179-01 / ER32SET1, suitably used according to the electrode diameter in the EL-M0003 collet chuck, can be clamped tube, threaded and round electrodes with diameters Ø2 ~ Ø20mm

→ **62120-02/C20-ER16-100** Mini Collet holder for collets ER16 ith shank 20mm

With high precision ER16 collets (62172-101 to 62172-104) sealed with C-ER16/seals, suitably usedin the mini collet chuck 62120-02/C20-ER16-100, according to the electrode diameter, can be clamped small tube, threaded and round electrodes with diamters from Ø0,50mm...

Erowa®, ITS® are registered Trade Marks of EROWA AG.
MACRO®, System 3R® are registered Trade Marks of System 3R International AB.

ELERO, s.r.o.
Považská Teplá 28
017 05 Považská Bystrica
Slovakia

Tel.: 00421 42 4331991-2
Mobile: 00421 907 411 787
Fax/Tel.: 00421 42 4331990
E-mail: elero@elero.sk www.elero.sk

Clamping systems compatible with EROW.A

Item No.: EL-N0005
Gauging pin 50x50mm, Φ40mm, ITS50



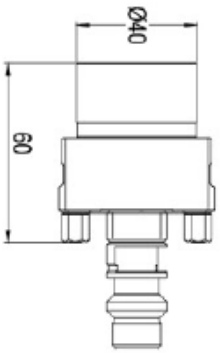

Item No.: EL-N0006
Parallel calibration pin 100x60mm, ITS50

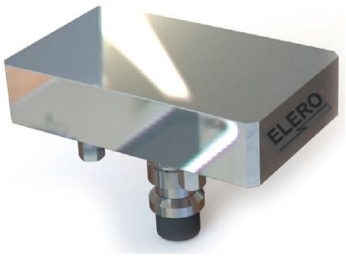

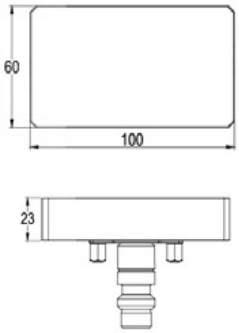

Item No.: EL-N0007
Calibration pin Φ30mm, ITS50



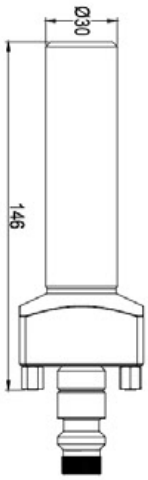

Erowa®, ITS® are registered Trade Marks of EROWA AG.
MACRO®, System 3R® are registered Trade Marks of System 3R International AB.

ELERO, s.r.o.
Považská Teplá 28
017 05 Považská Bystrica
Slovakia

Tel.: 00421 42 4331991-2
Mobile: 00421 907 411 787
Fax/Tel.: 00421 42 4331990
E-mail: elero@elero.sk www.elero.sk

Clamping systems compatible with EROW.A

Centering sensors ITS50, with fixed sensing pin

Item No.:

EL-N0001 Centering sensor with fixed sensing pin with ball 4mm
EL-N0001-1 Centering sensor with fixed sensing pin with ball 5mm
EL-N0002 Centering sensor with fixed sensing pin with ball 6mm
EL-N0003 Centering sensor with fixed sensing pin with ball 8mm

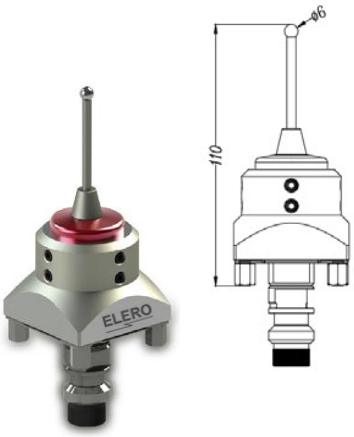

Replaceable sensing pin for centering sensors EL-N0001, EL-N0002 and EL-N0003:

Item No.:

RSP-0004 Replaceable sensing pin with ball 4mm
RSP-0005 Replaceable sensing pin with ball 5mm
RSP-0006 Replaceable sensing pin with ball 6mm
RSP-0008 Replaceable sensing pin with ball 8mm



Centering sensors ITS50, with spring-loaded sensing pin

Item No.:

EL-N0004-2 Centering sensors with spring-loaded sensing pin, with ball 2mm
EL-N0004-3 Centering sensors with spring-loaded sensing pin, with ball 3mm
EL-N0004 Centering sensors with spring-loaded sensing pin, with ball 4mm
EL-N0004-1 Centering sensors with spring-loaded sensing pin, with ball 5mm
EL-N0004-6 Centering sensors with spring-loaded sensing pin, with ball 6mm



Replaceable sensing pin for spring-loaded centering sensors EL-N0004:

Item No.:

RSLSP-0002 Replaceable sensing pin with ball 2mm, for spring loaded sensors
RSLSP-0003 Replaceable sensing pin with ball 3mm, for spring loaded sensors
RSLSP-0004 Replaceable sensing pin with ball 4mm, for spring loaded sensors
RSLSP-0005 Replaceable sensing pin with ball 5mm, for spring loaded sensors
RSLSP-0006 Replaceable sensing pin with ball 6mm, for spring loaded sensors

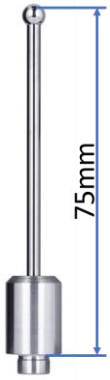

Erowa®, ITS® are registered Trade Marks of EROWA AG.
MACRO®, System 3R® are registered Trade Marks of System 3R International AB.

ELERO, s.r.o.
Považská Teplá 28
017 05 Považská Bystrica
Slovakia

Tel.: 00421 42 4331991-2
Mobile: 00421 907 411 787
Fax/Tel.: 00421 42 4331990
E-mail: elero@elero.sk www.elero.sk

Clamping systems compatible with EROW.A

Item No.:

EL-P0001 Magnetic probe for working table of die sinking EDM, with ball 4mm
EL-P0002-1 Magnetic probe for working table of die sinking EDM, with ball 5mm
EL-P0002 Magnetic probe for working table of die sinking EDM, with ball 6mm
EL-P0003 Magnetic probe for working table of die sinking EDM, with ball 8mm





Item No.: 54945-02/BS340H
Universal arm on magnetic base
Connecting thread M8, tread lenght 8,2mm.

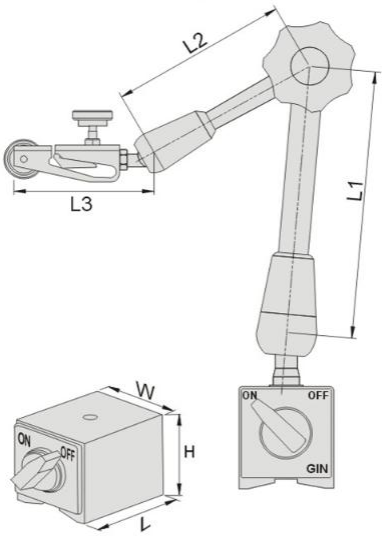



54945-02/BS340H					
Arm length			Magnetic base		
L1	**L2**	**L3**	**L**	**W**	**H**
135	110	65	60	50	55
Clamping force of magnetic base 80N					
Weight 1,58kg					

Item No.: 55280
High precision sensitive lever indicator 0,002mm for 54945-02/BS340H



Erowa®, ITS® are registered Trade Marks of EROWA AG.
MACRO®, System 3R® are registered Trade Marks of System 3R International AB.

ELERO, s.r.o.
Považská Teplá 28
017 05 Považská Bystrica
Slovakia

Tel.: 00421 42 4331991-2
Mobile: 00421 907 411 787
Fax/Tel.: 00421 42 4331990
E-mail: elero@elero.sk www.elero.sk

Clamping systems compatible with EROW.A

Item No.: EL-Q0005A

Adjusting chuck in X, Y, C axis
For square and round electrode clamping up to diameter Ø22mm
Net weight 5kg, height 112mm.



Item No.: EL-V0001

Angle clamping unit for pallets and electrode holders of clamping system ITS50

Possible to produce with internal flushing (optional)

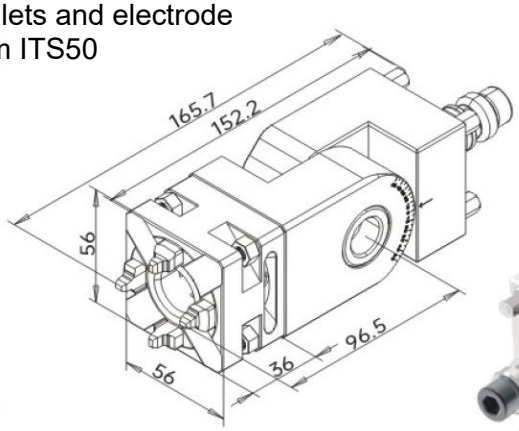



Item No.: EL-V0020

Angle collet chuck electrode holder ER16 / ITS50
Scale 0-90°. Rotation range 0-180°.
For electrodes diameter D 0,5-10mm

ER16

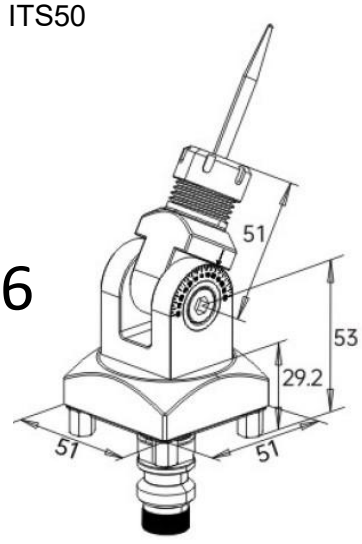



Erowa®, ITS® are registered Trade Marks of EROWA AG.
MACRO®, System 3R® are registered Trade Marks of System 3R International AB.

ELERO, s.r.o.
Považská Teplá 28
017 05 Považská Bystrica
Slovakia

Tel.: 00421 42 4331991-2
Mobile: 00421 907 411 787
Fax/Tel.: 00421 42 4331990
E-mail: elero@elero.sk www.elero.sk

Clamping systems compatible with EROW.A

Item No.: EL-W0002
Universal stainless holder with cross slide movement 2mm and pendulum tilting +/- 4°

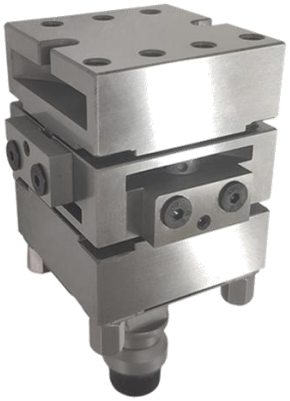



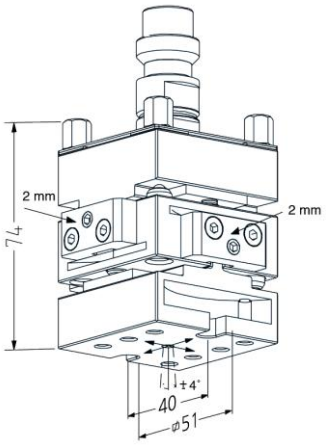

Item No.:
EL-U0001 D72 stainless steel clamping pallet ITS, hole 26,5 x 26,5mm



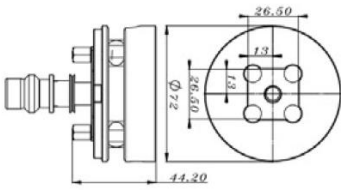

Item No.:
EL-U0002 D72 stainless steel clamping pallet ITS, groove 20,5mm



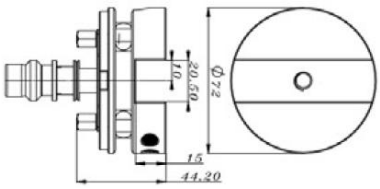

Item No.:
EL-U0003 D72 stainless steel clamping pallet ITS, flat with fastening screws



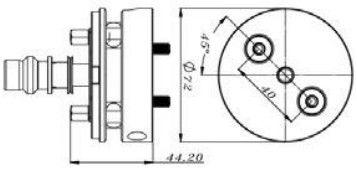

Erowa®, ITS® are registered Trade Marks of EROWA AG.
MACRO®, System 3R® are registered Trade Marks of System 3R International AB.

ELERO, s.r.o.
Považská Teplá 28
017 05 Považská Bystrica
Slovakia

Tel.: 00421 42 4331991-2
Mobile: 00421 907 411 787
Fax/Tel.: 00421 42 4331990
E-mail: elero@elero.sk www.elero.sk

Clamping systems compatible with EROW.A

Item No.:
EL-U0004 D72 stainless steel clamping pallet ITS, flat



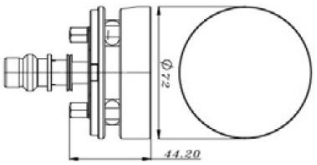

Item No.:
EL-U0005 D115 stainless steel reference pallet ITS

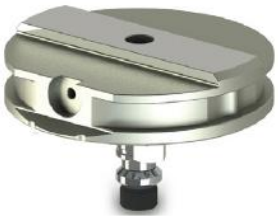

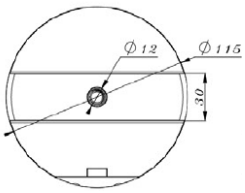

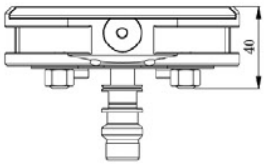

Item No.:
EL-U0006 D148 stainless steel reference pallet ITS, hole raster 25mm



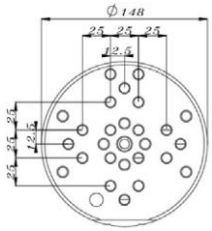

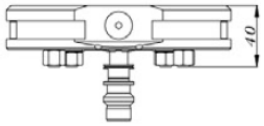

Erowa®, ITS® are registered Trade Marks of EROWA AG.
MACRO®, System 3R® are registered Trade Marks of System 3R International AB.

ELERO, s.r.o.
Považská Teplá 28
017 05 Považská Bystrica
Slovakia

Tel.: 00421 42 4331991-2
Mobile: 00421 907 411 787
Fax/Tel.: 00421 42 4331990
E-mail: elero@elero.sk www.elero.sk

Clamping systems compatible with EROW.A

Copper and graphite electrodes blanks for the production of electrodes for use in precision stainless steel holders EL-M0001, EL-M0004, EL-M0001/3-R and EL-M0004/3-R

COPPER and GRAPHITE electrode production material - 12pcs in package

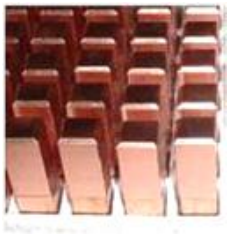

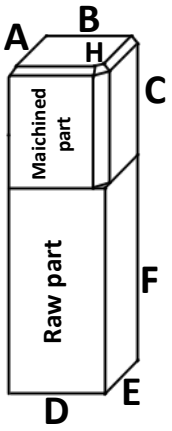

A	B	C	D	E	F	H	Item No.
14,7	14,7	30	15	15	50	2,5	**EL-Cu15-01**
							EL-Gr15-01
24,7	24,7	30	25	25	50	2,5	**EL-Cu25-01**
							EL-Gr25-01

We can supply any other dimensions upon request.

COPPER and GRAPHITE electrode production material - 12pcs in package



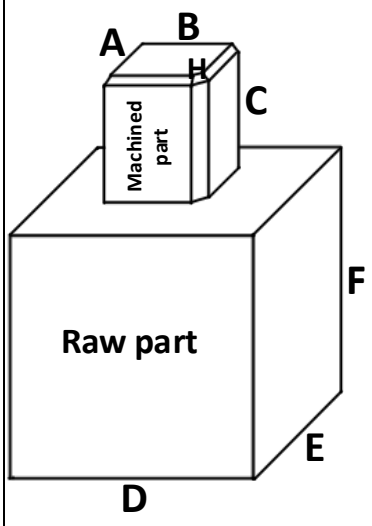

A	B	C	D	E	F	H	Item No.
15	15	30	25	25	50	2,5	**EL-Cu15-02**
							EL-Gr15-02
15	15	30	30	30	50	2,5	**EL-Cu15-03**
							EL-Gr15-03
15	15	30	35	35	50	2,5	**EL-Cu15-04**
							EL-Gr15-04
15	15	30	40	40	50	2,5	**EL-Cu15-05**
							EL-Gr15-05
15	15	30	50	50	50	2,5	**EL-Cu15-06**
							EL-Gr15-06

We can supply any other dimensions upon request.

*EL–Cu = copper production material
*EL–Gr = graphite production material

Erowa®, ITS® are registered Trade Marks of EROWA AG.
MACRO®, System 3R® are registered Trade Marks of System 3R International AB.

ELERO, s.r.o.
Považská Teplá 28
017 05 Považská Bystrica
Slovakia

Tel.: 00421 42 4331991-2
Mobile: 00421 907 411 787
Fax/Tel.: 00421 42 4331990
E-mail: elero@elero.sk www.elero.sk

Clamping systems compatible with EROW.A

COPPER and GRAPHITE electrode production material - 12pcs in package



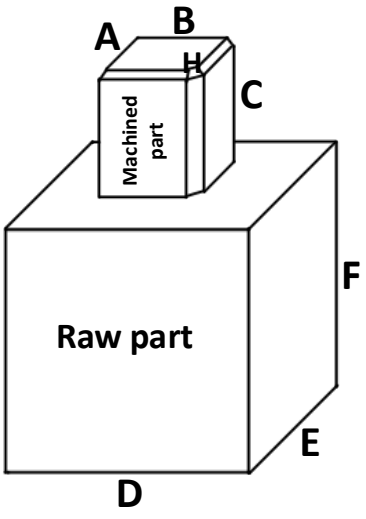

A	B	C	D	E	F	H	Item No.
25	25	30	25	25	50	2,5	**EL-Cu25-02**
							EL-Gr25-02
25	25	30	30	30	50	2,5	**EL-Cu25-03**
							EL-Gr25-03
25	25	30	35	35	50	2,5	**EL-Cu25-04**
							EL-Gr25-04
25	25	30	40	40	50	2,5	**EL-Cu25-05**
							EL-Gr25-05
25	25	30	50	50	50	2,5	**EL-Cu25-06**
							EL-Gr25-06

We can supply any other dimensions upon request.

* EL–Cu = copper production material
* EL–Gr = graphite production material

Item No.:
EL-X0001 Plastic shelf for 12 pcs standard holders ITS50
194x258x67mmn







Item No.:
EL-X0002 Aluminium shelf for 20 pcs standard holders ITS50
255x390x67mm







Erowa®, ITS® are registered Trade Marks of EROWA AG.
MACRO®, System 3R® are registered Trade Marks of System 3R International AB.

ELERO
Equipment for EDM
Potreby pre elektroeróziu

ELERO, s.r.o.
Považská Teplá 28
017 05 Považská Bystrica
Slovakia

Tel.: 00421 42 4331991-2
Mobile: 00421 907 411 787
Fax/Tel.: 00421 42 4331990
E-mail: elero@elero.sk www.elero.sk

Clamping systems compatible with EROW.A

Item No..: EL-Q0026 Working kart 970x490x900mm
for pallets and holders ITS50, ITS100



Item No.:
EL-M0001 Precision stainless steel holder, with clamping hole for electrode shank 25x25mm
EL-M0004 Precision stainless steel holder, with clamping hole for electrode shank 15x15mm

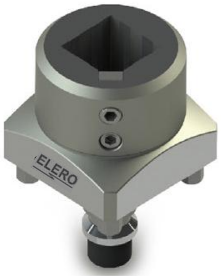

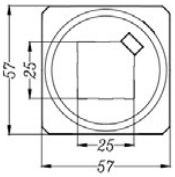

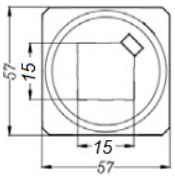

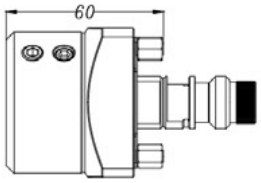

Notice: Clamping spigot is not part of packaging

Item No.:
EL-M0002 Sharp forming teeth stainless steel rod, shank 25x25mm



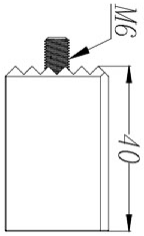

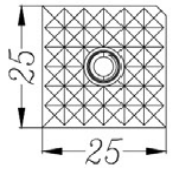

Item No.: EL-V0007 Stainless universal electrode holder 180x122x64,2mm, with sharp forming teeth



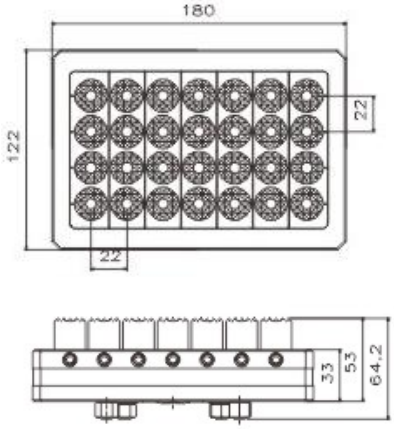

Erowa®, ITS® are registered Trade Marks of EROWA AG.
MACRO®, System 3R® are registered Trade Marks of System 3R International AB.

ELERO, s.r.o.
Považská Teplá 28
017 05 Považská Bystrica
Slovakia

Tel.: 00421 42 4331991-2
Mobile: 00421 907 411 787
Fax/Tel.: 00421 42 4331990
E-mail: elero@elero.sk www.elero.sk

Clamping systems compatible with EROW.A

Obj. č.: EL-HQ0002
Self centering vise ITS50,
Clamping range 0-31mm, clamping force 2000N

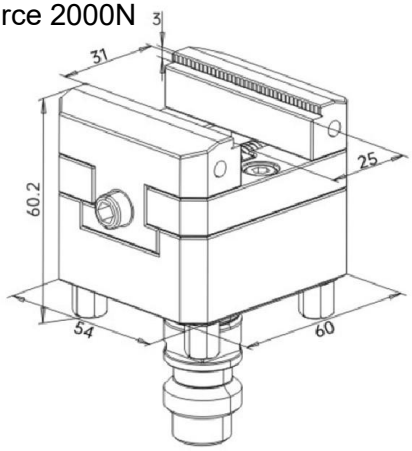



Obj. č.: EL-ER62
Self centering vise ITS100,
Clamping range 0-62mm, clamping force 3000N



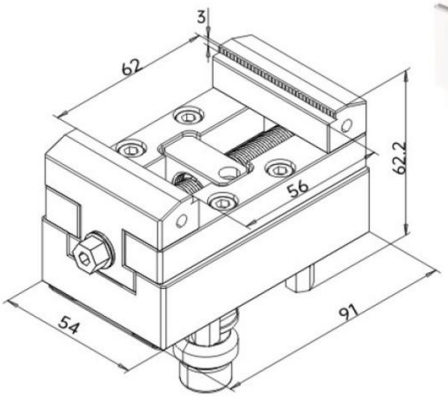

Obj. č.: EL-ER46X90
Self centering vise ITS100 with G plate,
Clamping range 0-46mm, clamping force 4000N



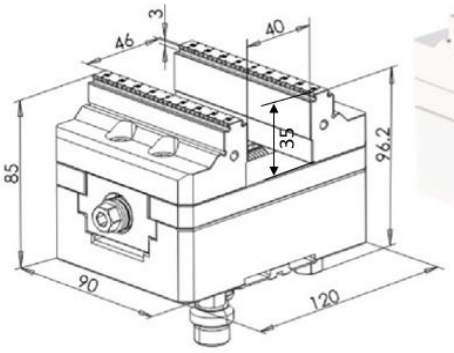

Erowa®, ITS® are registered Trade Marks of EROWA AG.
MACRO®, System 3R® are registered Trade Marks of System 3R International AB.

ELERO
Equipment for EDM
Potreby pre elektroeróziu

ELERO, s.r.o.
Považská Teplá 28
017 05 Považská Bystrica
Slovakia

Tel.: 00421 42 4331991-2
Mobile: 00421 907 411 787
Fax/Tel.: 00421 42 4331990
E-mail: elero@elero.sk www.elero.sk

Clamping systems compatible with EROW.A

Obj. č.: EL-V0003
Magnetic pallet with G plate

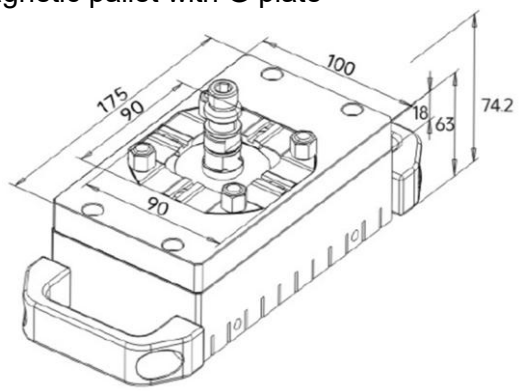



Obj. č.: EL-T0021
Precision toolmaker vise Unoset ITS50
Clamping range 0-100mm.

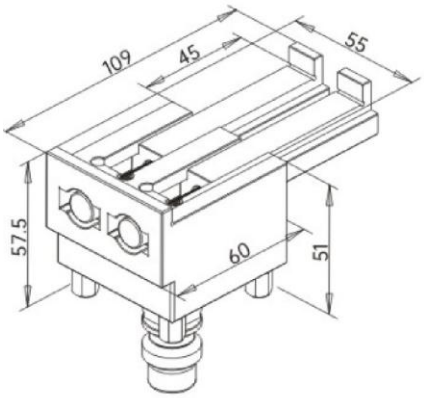



Obj. č.: EL-T0002
Precision toolmaker vise – pendulum, ITS50
With microadjusting in 3axis, clamping range 0-100mm,
angle setting 0-360°

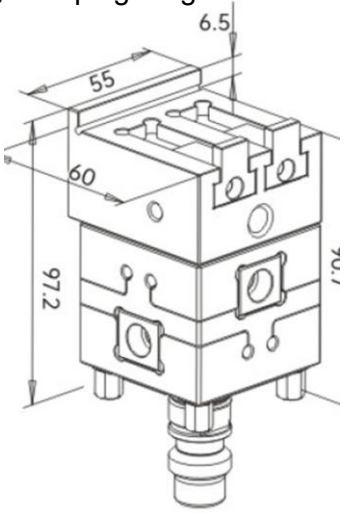



Erowa®, ITS® are registered Trade Marks of EROWA AG.
MACRO®, System 3R® are registered Trade Marks of System 3R International AB.

ELERO, s.r.o.
Považská Teplá 28
017 05 Považská Bystrica
Slovakia

Tel.: 00421 42 4331991-2
Mobile: 00421 907 411 787
Fax/Tel.: 00421 42 4331990
E-mail: elero@elero.sk www.elero.sk

Clamping systems compatible with EROW.A

Item No.: EL-V0004

Dividing device with manual quick chuck ITS100 compatible with EROW.A, tilting +90°/-10°, with fine tuning 360°. Option to set any angle or use 1 of 3 dividing plates. Available with 4", 5" or 6" 3-jaw chuck.





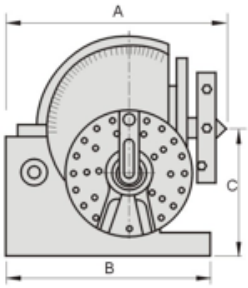

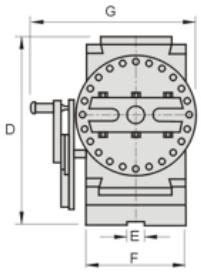

Optional accessory:
4" or 5" 3-jaw chuck (for BS0)
5" or 6" 3-jaw chuck (for BS1)

Order No.	Model	A	B	C	D	E	F	G
65500-01	BS0	189	160	100	173	16	91	140
65500-02	BS1	293	210	128	220	16	114	156

Device is not stainless steel made! After every use in water it's necessary to dry it, clean it and apply protection oil!

Item No.: 53210-03/04/05 EPF-SER

High-precision stainless dividing device, with fine tuning 360°, with ER20, ER32 or ER50 collets chuck. Option to set any angle or use 24-tooth division = 15º ±5". Rotational accuracy 0,003mm.


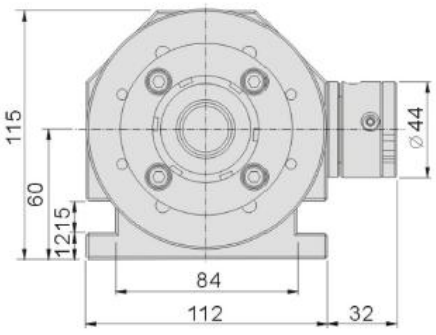

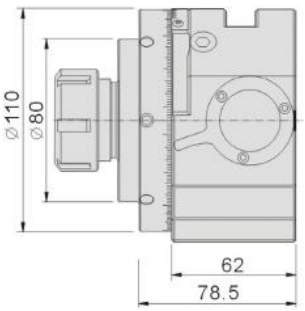

Item No.	Model	ER Collets included	Range Ø mm
53210-03	EPF-SER20	3, 4, 6, 8, 10	1.0 – 13.0
53210-04	EPF-SER32	4, 8, 12, 16, 20	2.0 – 20.0
53210-05	EPF-SER50	12, 18, 20, 30, 34	10.0 – 34.0

Erowa®, ITS® are registered Trade Marks of EROWA AG.
MACRO®, System 3R® are registered Trade Marks of System 3R International AB.

ELERO, s.r.o.
Považská Teplá 28
017 05 Považská Bystrica
Slovakia

Tel.: 00421 42 4331991-2
Mobile: 00421 907 411 787
Fax/Tel.: 00421 42 4331990
E-mail: elero@elero.sk www.elero.sk

Clamping systems compatible with EROW.A

Item No.: 53210-09/EPF-EQC50

High-precision stainless dividing device, with fine tuning 360°, with manual quick chuck ITS50 compatible with EROW.A. Option to set any angle or use 24-tooth division = 15º ±5".
Rotational accuracy 0,003mm. Repeat clamping accuracy 0,003mm.



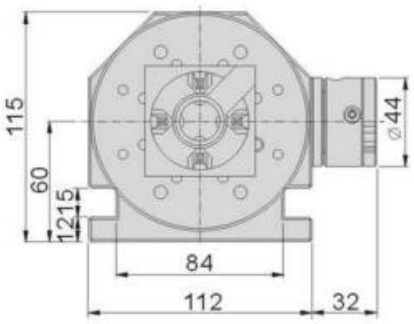

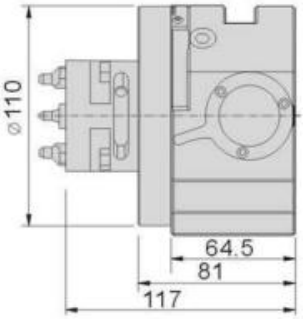

Item No.: 53210-10/EPF-EQC100

High-precision stainless dividing device, with fine tuning 360°, with manual quick chuck ITS100 compatible with EROW.A. Option to set any angle or use 24-tooth division = 15º ±5".
Rotational accuracy 0,003mm. Repeat clamping accuracy 0,003mm.



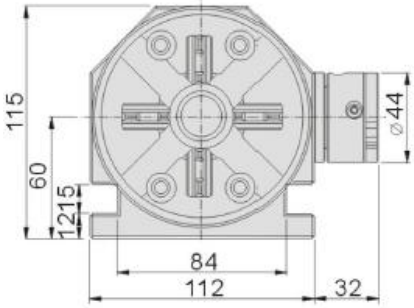

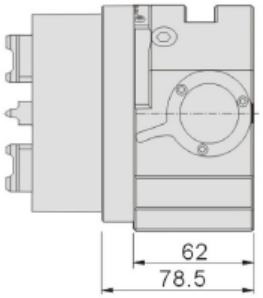

Item No.: 50030-01/PFH-SC04

High-precision stainless dividing device with 4" 3 – jaw chuck, with fine tuning 360°.
Option to set any angle or use 24-tooth division = 15º ±5". Rotational accuracy 0,003mm. Repeat clamping accuracy into chuck 0,015mm. Clamping range: I.D.Ø32 - Ø84mm, O.D.Ø3 - Ø90mm.
Through hole diameter Ø32mm.



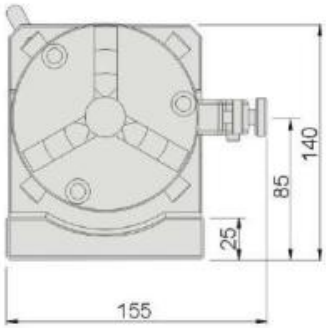

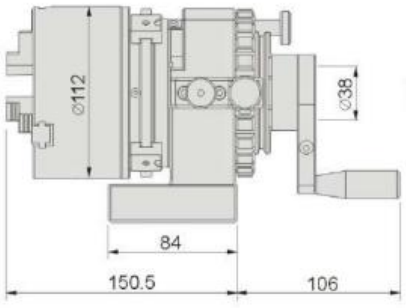

Erowa®, ITS® are registered Trade Marks of EROWA AG.
MACRO®, System 3R® are registered Trade Marks of System 3R International AB.

ELERO
Equipment for EDM
Potreby pre elektroeróziu

ELERO, s.r.o.
Považská Teplá 28
017 05 Považská Bystrica
Slovakia

Tel.: 00421 42 4331991-2
Mobile: 00421 907 411 787
Fax/Tel.: 00421 42 4331990
E-mail: elero@elero.sk www.elero.sk

Clamping systems compatible with EROW.A

Item No.: 50030-02/PFH-SC05

High-precision stainless dividing device with 5" 3 – jaw chuck, with fine tuning 360º. Option to set any angle or use 24-tooth division = 15º ±5". Rotational accuracy 0,003mm. Repeat clamping accuracy into chuck 0,015mm. Clamping range: I.D.Ø35 – Ø110mm, O.D.Ø3 – Ø110mm. Through hole diameter Ø32mm.



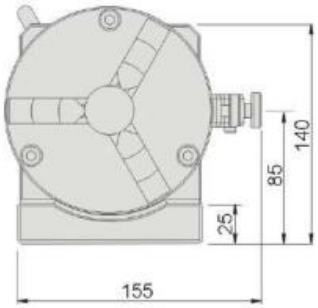

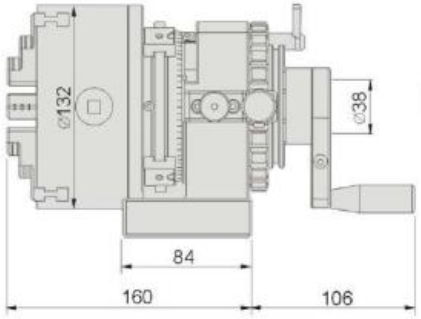

Item No.: 50030-03/04/05 PFH-SER

High-precision stainless dividing device, with fine tuning 360º, with ER20, ER32 or ER50 collets chuck. Option to set any angle or use 24-tooth division = 15º ±5". Rotational accuracy 0,003mm.



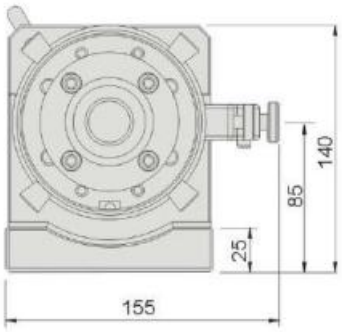

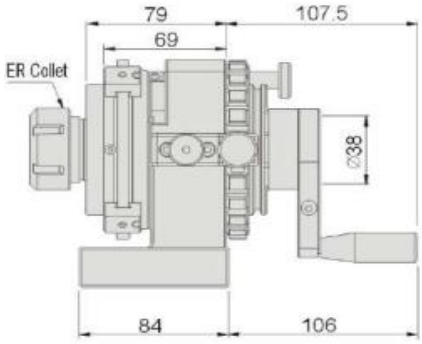

Item No.	Model	ER Collets included	Range Ø mm
50030-03	PFH-SER20	3, 4, 6, 8, 10	1.0 – 13.0
50030-04	PFH-SER32	4, 8, 12, 16, 20	2.0 – 20.0
50030-05	PFH-SER50	12, 18, 20, 30, 34	10.0 – 34.0

Item No.: 50030-09/PFH-EQC50

High-precision stainless dividing device, with fine tuning 360º, with manual quick chuck ITS50 compatible with EROW.A. Option to set any angle or use 24-tooth division = 15º ±5". Rotational accuracy 0,003mm. Repeat clamping accuracy 0,003mm.



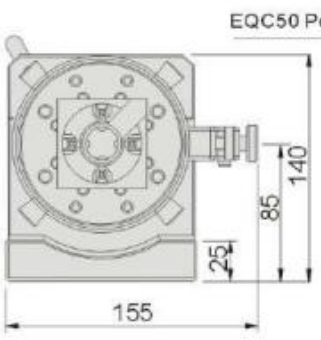

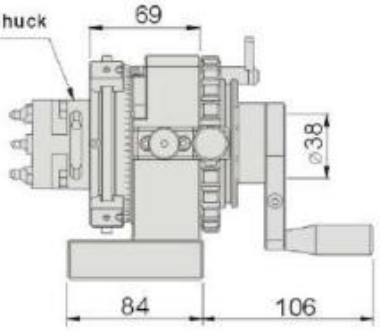

Erowa®, ITS® are registered Trade Marks of EROWA AG.
MACRO®, System 3R® are registered Trade Marks of System 3R International AB.

ELERO, s.r.o.
Považská Teplá 28
017 05 Považská Bystrica
Slovakia

Tel.: 00421 42 4331991-2
Mobile: 00421 907 411 787
Fax/Tel.: 00421 42 4331990
E-mail: elero@elero.sk www.elero.sk

Clamping systems compatible with EROW.A

Item No.: 50030-10/PFH-EQC100

High-precision stainless dividing device, with fine tuning 360º, with manual quick chuck ITS100 compatible with EROW.A. Option to set any angle or use 24-tooth division = 15º ±5". Rotational accuracy 0,003mm. Repeat clamping accuracy 0,003mm.



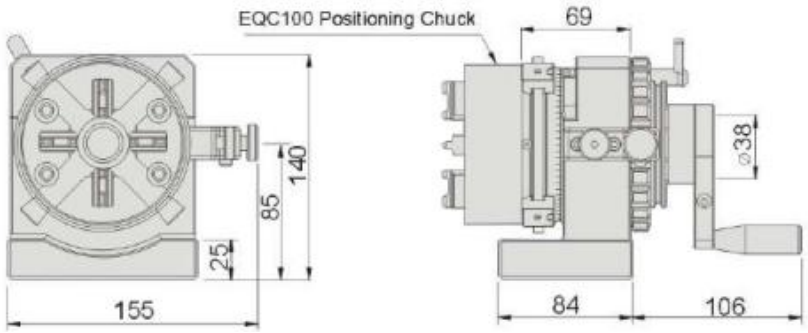

Item No.: EL-V0006

Manual dividing device, stainless steel, with manual quick chuck ITS100, compatible with EROW.A. Rotation accuracy 0,02mm.





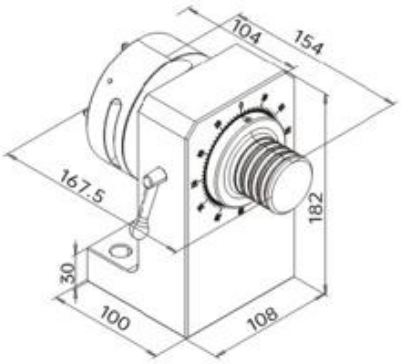

Item No.: EL-V0006-UCH

Manual dividing device, stainless steel, with 4" 3-jaw chuck.
Clamping range: in Ø32 - Ø84mm, out Ø3 - Ø90mm.
Rotation accuracy 0,03mm.





Erowa®, ITS® are registered Trade Marks of EROWA AG.
MACRO®, System 3R® are registered Trade Marks of System 3R International AB.

ELERO
Equipment for EDM
Potreby pre elektroeróziu

ELERO, s.r.o.
Považská Teplá 28
017 05 Považská Bystrica
Slovakia

Tel.: 00421 42 4331991-2
Mobile: 00421 907 411 787
Fax/Tel.: 00421 42 4331990
E-mail: elero@elero.sk www.elero.sk

Clamping systems compatible with EROW.A

Item No.: EL-Q0021
Extension aluminium arm for chucks

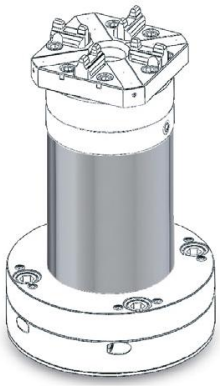

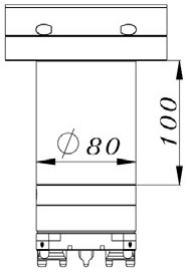

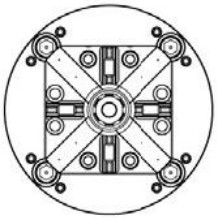

Item No.: EL-Q0022
Electrode centering device



Item No.: EL-Q0024
Electrode centering device with pneumatic chuck ITS100 compatible with EROW.A.



Erowa®, ITS® are registered Trade Marks of EROWA AG.
MACRO®, System 3R® are registered Trade Marks of System 3R International AB.

ELERO, s.r.o.
Považská Teplá 28
017 05 Považská Bystrica
Slovakia

Tel.: 00421 42 4331991-2
Mobile: 00421 907 411 787
Fax/Tel.: 00421 42 4331990
E-mail: elero@elero.sk www.elero.sk

Clamping systems compatible with EROW.A

Item No.: EL-AC001
Adaptor from ITS50 to Compact



Item No.: EL-AC002
Basic holder Compact



Item No.: EL-AC003
Extension holder Compact D30x52,5mm



Item No.: EL-AC004
Extension holder Compact D30x102,5mm



Item No.: EL-AC005
Adaptor 90° from ITS50 to Compact



Erowa®, ITS® are registered Trade Marks of EROWA AG.
MACRO®, System 3R® are registered Trade Marks of System 3R International AB.

ELERO, s.r.o.
Považská Teplá 28
017 05 Považská Bystrica
Slovakia

Tel.: 00421 42 4331991-2
Mobile: 00421 907 411 787
Fax/Tel.: 00421 42 4331990
E-mail: elero@elero.sk www.elero.sk

Clamping systems compatible with EROW.A

Item No.: EL-3080E Camera detector compatible with EROW.A ITS







Screen size/pixels	7´´ / 1080
Visual accuracy	±0,003mm
Magnification´s multiples	50 times
Angle setting	each 15´´
Automatic edge detection	flash after edge finding (cross changes the colour)
Mark-line (cross) colours	White, Red, Green, Blue, Black
Rotation angle	Can manually angle rotate in steps of 15´´
Focus distance	50-60mm over the workpiece
Light source	LED lamp groups with adjustable intensity
Source	Lithium battery 4800mA
Charger	12V (2A)
Dimensions	178x175x93mm
Weight	2kg
Package	silver suitcase

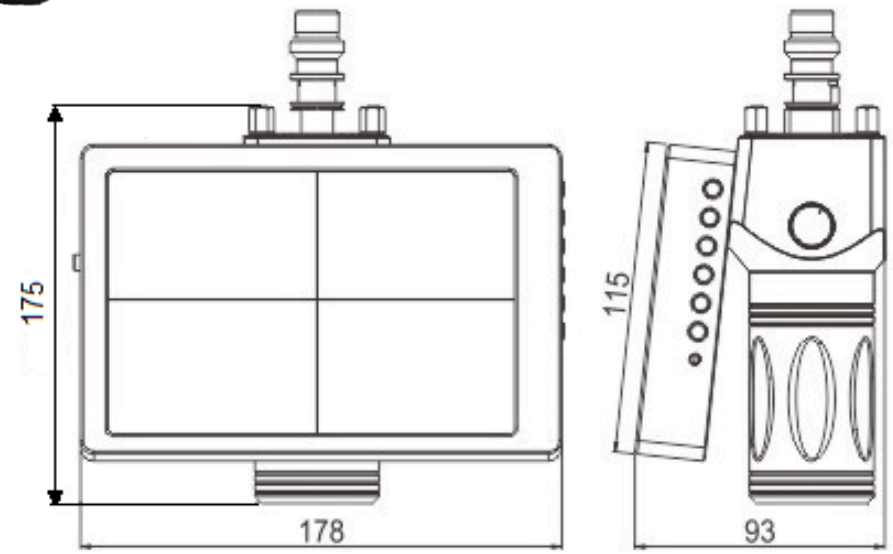

Erowa®, ITS® are registered Trade Marks of EROWA AG.
MACRO®, System 3R® are registered Trade Marks of System 3R International AB.

ELERO, s.r.o.
Považská Teplá 28
017 05 Považská Bystrica
Slovakia

Tel.: 00421 42 4331991-2
Mobile: 00421 907 411 787
Fax/Tel.: 00421 42 4331990
E-mail: elero@elero.sk www.elero.sk

Clamping systems compatible with EROW.A

Item No.: EL-H0001

Pneumatic chuck for heavy duty machining, clamping force 24 000N.



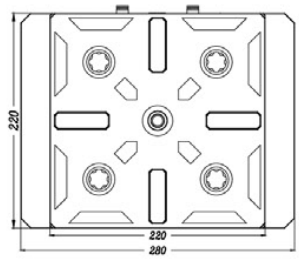

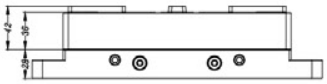

Item No.: EL-H0002

Pallet for heavy duty machining, use only with pneumatic chuck EL-H0001

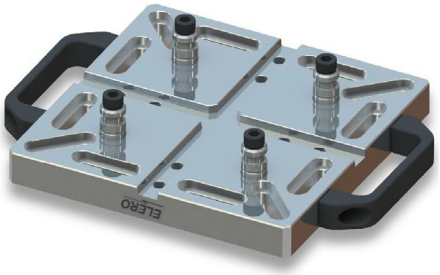

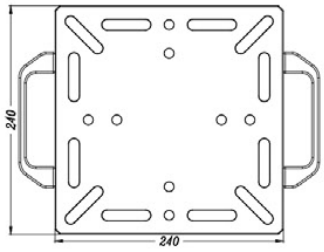

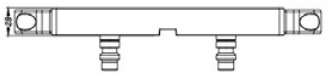

Item No.: EL-J0002

Workholding plate with 2 pneumatic chucks, for heavy duty machining.
Clamping force 20 000N.

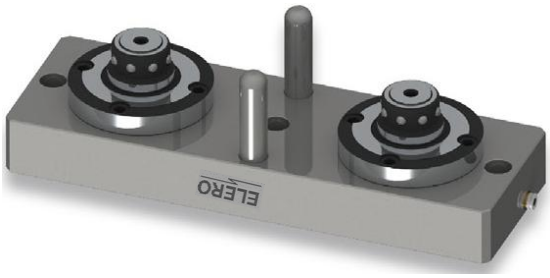

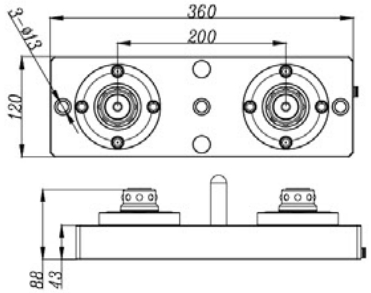

Item No.: EL-J0001

Pallet with 2 pneumatic chucks, use only with EL-J0002



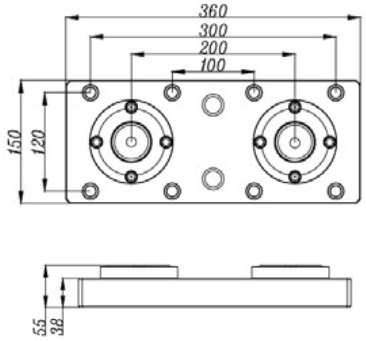

Erowa®, ITS® are registered Trade Marks of EROWA AG.
MACRO®, System 3R® are registered Trade Marks of System 3R International AB.

ELERO, s.r.o.
Považská Teplá 28
017 05 Považská Bystrica
Slovakia

Tel.: 00421 42 4331991-2
Mobile: 00421 907 411 787
Fax/Tel.: 00421 42 4331990
E-mail: elero@elero.sk www.elero.sk

Clamping systems compatible with EROW.A

Item No.: EL-J0004
Workholding plate with 4 pneumatic chucks, for heavy duty machining
Clamping force 20 000N.



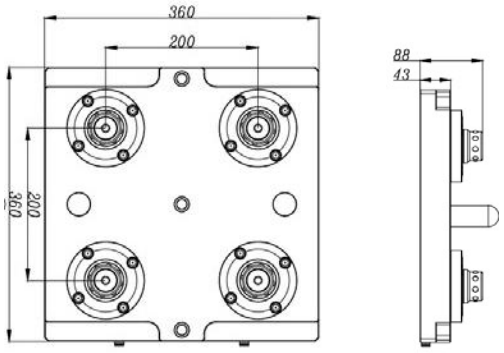

Item No.: EL-J0003
Pallet with 4 pneumatic chucks, use only with EL-J0004



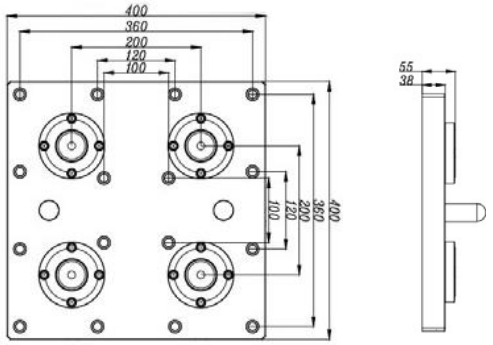

Item No.: EL-MTS0001
Work-holding plate
with 2 pneumatic chucks MTS

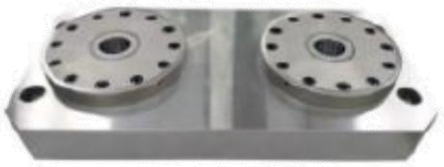

Item No.: EL-MTS0004
Pallet for using
with work-holding plate EL-MTS0001



Erowa®, ITS® are registered Trade Marks of EROWA AG.
MACRO®, System 3R® are registered Trade Marks of System 3R International AB.

ELERO, s.r.o.
Považská Teplá 28
017 05 Považská Bystrica
Slovakia

Tel.: 00421 42 4331991-2
Mobile: 00421 907 411 787
Fax/Tel.: 00421 42 4331990
E-mail: elero@elero.sk www.elero.sk

Clamping systems compatible with EROW.A

Item No.: EL-MTS0002
Work-holding plate
with 4 pneumatic chucks MTS



Item No.: EL-MTS0005
Pallet for using
with work-holding plate EL-MTS0002



Item No.: EL-MTS0003
Work-holding plate
with 6 pneumatic chucks MTS



Item No.: EL-MTS0006
Pallet for using
with work-holding plate EL-MTS0003



Item No.: EL-MTS0007
MTS chuck



Item No.: EL-MTS0008
Clamping spigot MTS



Item No.: EL-MTS0009
Clamping compensation spigot MTS



Item No.: EL-MTS0010
Clamping centering spigot MTS



Erowa®, ITS® are registered Trade Marks of EROWA AG.
MACRO®, System 3R® are registered Trade Marks of System 3R International AB.

ELERO, s.r.o.
Považská Teplá 28
017 05 Považská Bystrica
Slovakia

Tel.: 00421 42 4331991-2
Mobile: 00421 907 411 787
Fax/Tel.: 00421 42 4331990
E-mail: elero@elero.sk www.elero.sk

Clamping systems compatible with EROW.A

Item No.: EL-UPC0001 Pneumatic chuck UPC



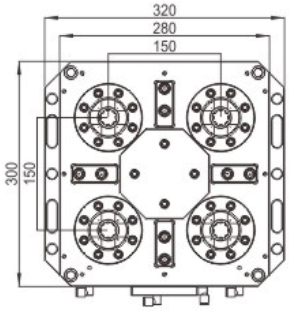

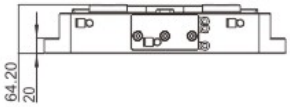

Item No.: EL-UPC0002 UPC holder with pneumatic power chuck, ITS100

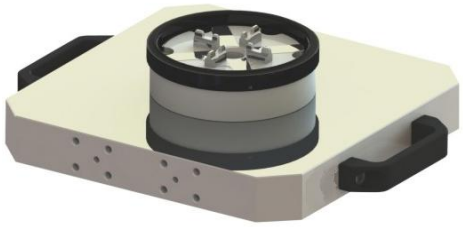

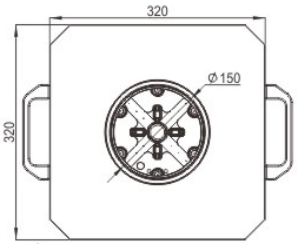

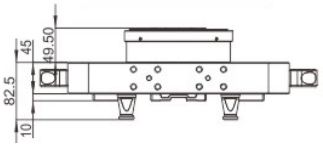

Item No.: EL-UPC0003 UPC holder with holes raster 45xM10

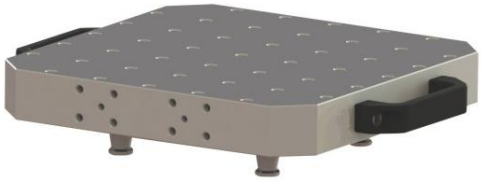

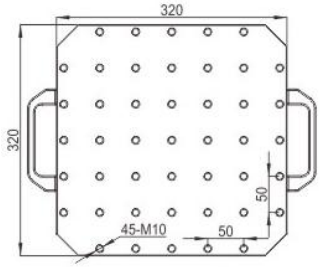

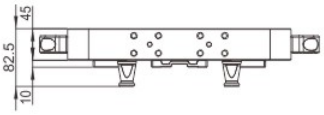

Item No.: EL-UPC0004 UPC holder



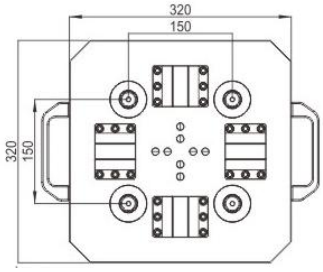

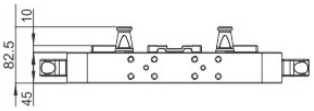

Item No.: EL-UPC0005 UPC reference segments



Erowa®, ITS® are registered Trade Marks of EROWA AG.
MACRO®, System 3R® are registered Trade Marks of System 3R International AB.

ELERO, s.r.o.
Považská Teplá 28
017 05 Považská Bystrica
Slovakia

Tel.: 00421 42 4331991-2
Mobile: 00421 907 411 787
Fax/Tel.: 00421 42 4331990
E-mail: elero@elero.sk www.elero.sk

Clamping systems compatible with EROW.A

Clamping segments for automatic loading systems

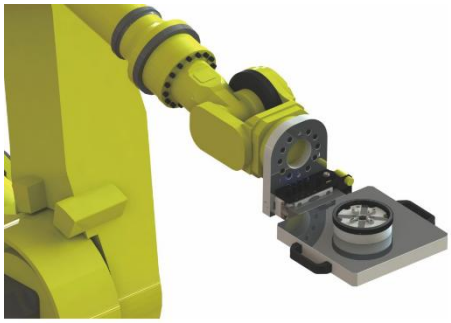






Item No.: EL-M1002 Gripper UPC, MTS

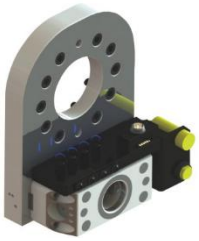
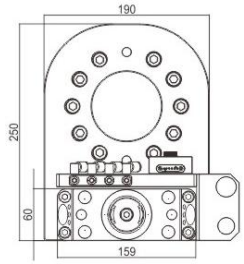

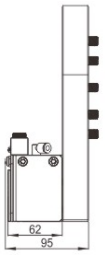

Item No.: EL-M1003 Gripper link

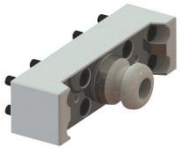
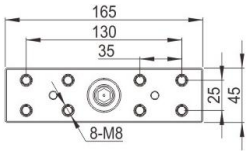

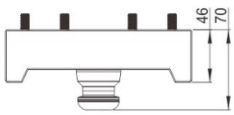

Item No.: EL-M1004 Gripper ITS50


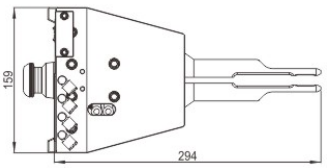

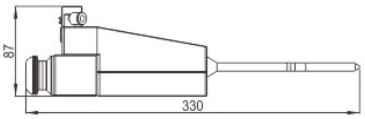

Item No.: EL-M1005 Gripper ITS D148


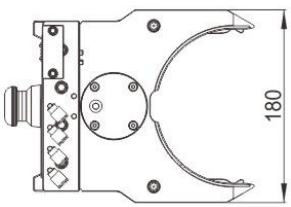

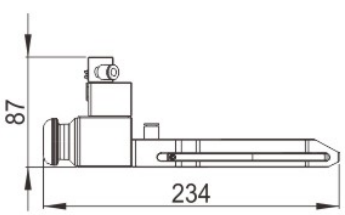

Erowa®, ITS® are registered Trade Marks of EROWA AG.
MACRO®, System 3R® are registered Trade Marks of System 3R International AB.

ELERO
Equipment for EDM
Potreby pre elektroeróziu

ELERO, s.r.o.
Považská Teplá 28
017 05 Považská Bystrica
Slovakia

Tel.: 00421 42 4331991-2
Mobile: 00421 907 411 787
Fax/Tel.: 00421 42 4331990
E-mail: elero@elero.sk www.elero.sk

Clamping systems compatible with EROW.A

Item No.: EL-M1006 RCS Gripper for UPC holders



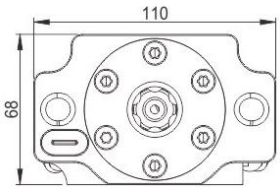

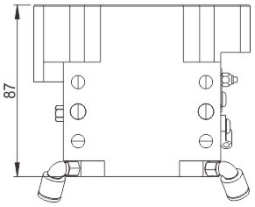

Item No.: EL-M1007 Gripper link

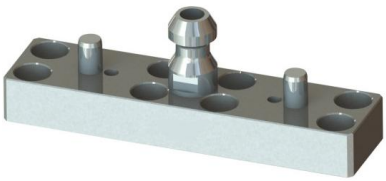

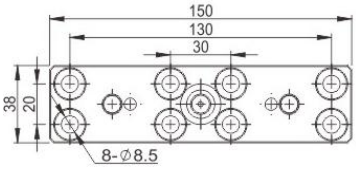

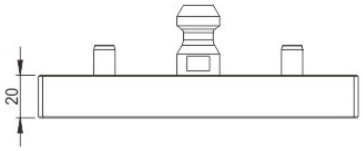

Item No.: EL-M1008 Pneumatic rotary device with clamping chuck ITS100

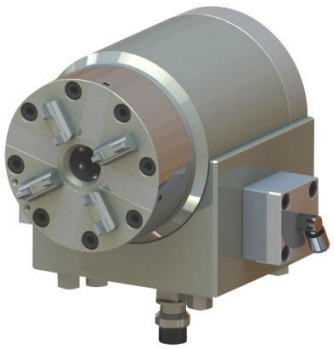

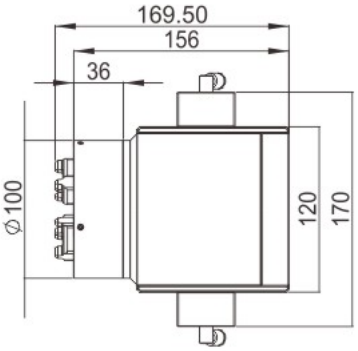

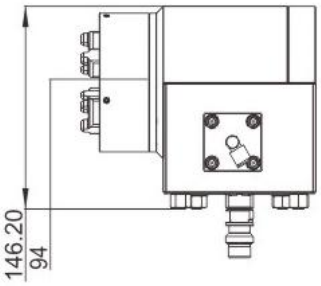

Item No.: EL-M1009 Pneumatic rotary device in 2 axis,
with clamping chuck ITS100

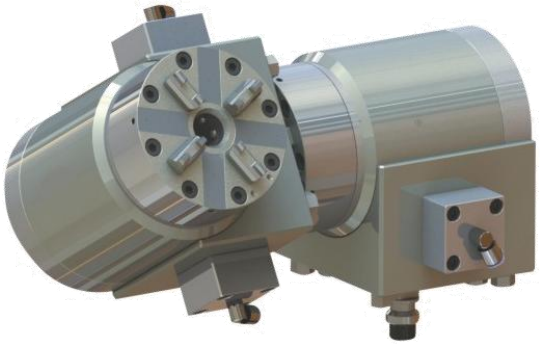

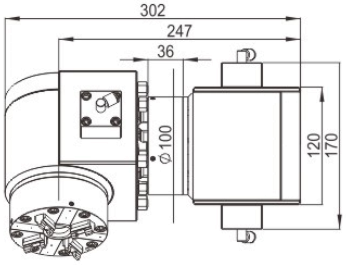

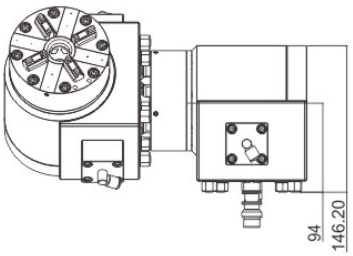

Erowa®, ITS® are registered Trade Marks of EROWA AG.
MACRO®, System 3R® are registered Trade Marks of System 3R International AB.

ELERO
Equipment for EDM
Potreby pre elektroeróziu