ELERO, s.r.o.
Považská Teplá 28
017 05 Považská Bystrica
Slovakia

Tel.: 00421 42 4331991-2
Mobile: 00421 907 411 787
Fax/Tel.: 00421 42 4331990
E-mail: elero@elero.sk www.elero.sk

CLAMPING SYSTEM ELERO FOR EDM WIRE CUTTERS - WEDM

High-precision clamping system for EDM wire cutters

Item No.: DSRSSM8 C = ? mm

Double sided ruler stainless steel Z=0 also Z=+5mm, custom made, clamping distance C = to dimension of EDM wire cutter working table, with micro-adjusting. Option M8, alternatively M6, …

View Z=0

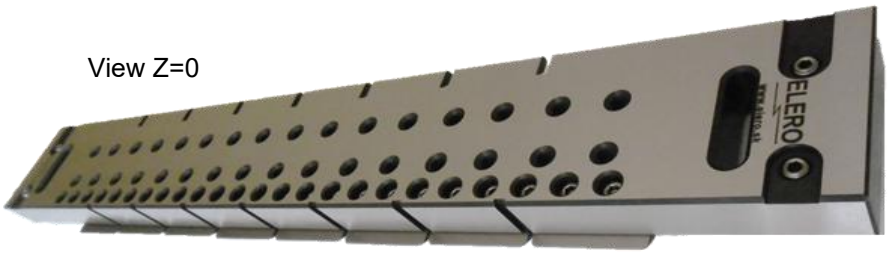

View Z+5mm



It is among the 7 best-selling clamps for wire cutters

Item No.: MACSS60X220

Adjustable clamp - stainless steel 60x220+5mm, M8, with micro adjusting, Z=0 also Z=+5mm

Top View



Detail



Bottom View



It is among the 7 best-selling clamps for wire cutters

Erowa®, ITS® are registered Trade Marks of EROWA AG.
MACRO®, System 3R® are registered Trade Marks of System 3R International AB.

ELERO
Equipment for EDM
Potreby pre elektroeróziu

ELERO, s.r.o.
Považská Teplá 28
017 05 Považská Bystrica
Slovakia

Tel.: 00421 42 4331991-2
Mobile: 00421 907 411 787
Fax/Tel.: 00421 42 4331990
E-mail: elero@elero.sk www.elero.sk

High-precision clamping system for EDM wire cutters

Item No.: 53145-02/WPV320
High-precision stainless steel vise with 3D micro adjusting
in 3 axis, clamping range 0-190mm

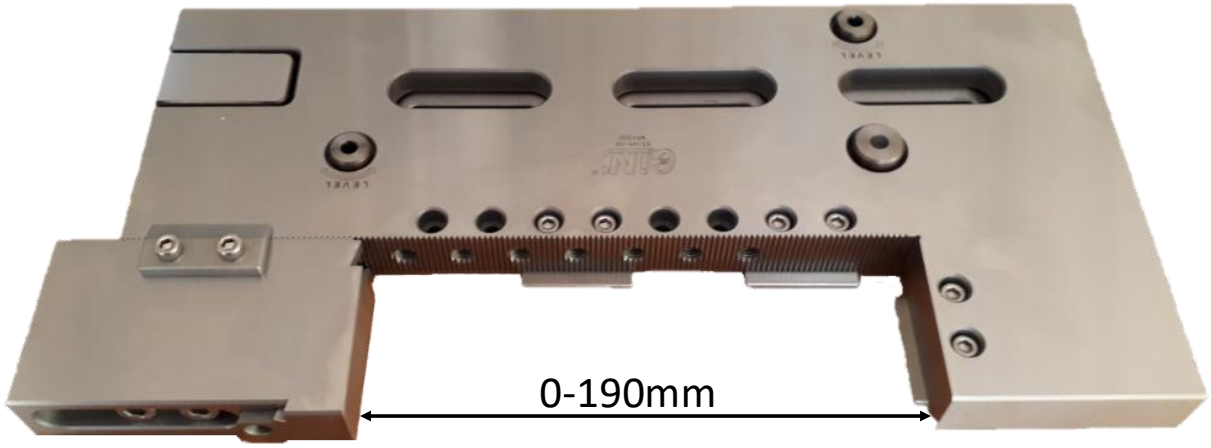

It is among the 7 best-selling clamps for wire cutters

Item No.: TCSS23x70x12
Top clamp – stainless steel, 23x70x12mm, M8
Hardened treatment



Item No.: TCSS23x90x12
Top clamp – stainless steel, 23x90x12mm, M8
Hardened treatment



Item No.: TCSS22x60x12+18
Top clamp - stainless steel, 22x60x12+18mm, M8
Hardened treatment



Item No.: HCSPSSM8L30 L=30mm
Item No.: HCSPSSM8L50 L=50mm
Item No.: HCSPSSM8L100 L=100mm
Hexagonal connectable support pillars stainless steel
with outer and inner thread M8



Erowa®, ITS® are registered Trade Marks of EROWA AG.
MACRO®, System 3R® are registered Trade Marks of System 3R International AB.

ELERO, s.r.o.
Považská Teplá 28
017 05 Považská Bystrica
Slovakia

Tel.: 00421 42 4331991-2
Mobile: 00421 907 411 787
Fax/Tel.: 00421 42 4331990
E-mail: elero@elero.sk www.elero.sk

High-precision clamping system for EDM wire cutters

Item No.: SCESSM8

Set - 181 pieces of clamping elements stainless steel M8 - screws, nuts, washers, clamps and hexagonal support pillars in practical box







It is among the 7 best-selling clamps for wire cutters

Set consist of:

Clamping screws stainless steel M8 with hexagon socket head

Item No.:

CSSS M8x20mm – 8pcs
CSSS M8x30mm – 8pcs
CSSS M8x40mm – 8pcs
CSSS M8x50mm – 8pcs
CSSS M8x60mm – 8pcs
CSSS M8x70mm – 8pcs
CSSS M8x80mm – 8pcs
CSSS M8x90mm – 8pcs
CSSS M8x100mm – 8pcs
CSSS M8x110mm – 8pcs
CSSS M8x120mm – 8pcs
CSSS M8x140mm – 8pcs
CSSS M8x150mm – 8pcs
CSSS M8x160mm – 8pcs

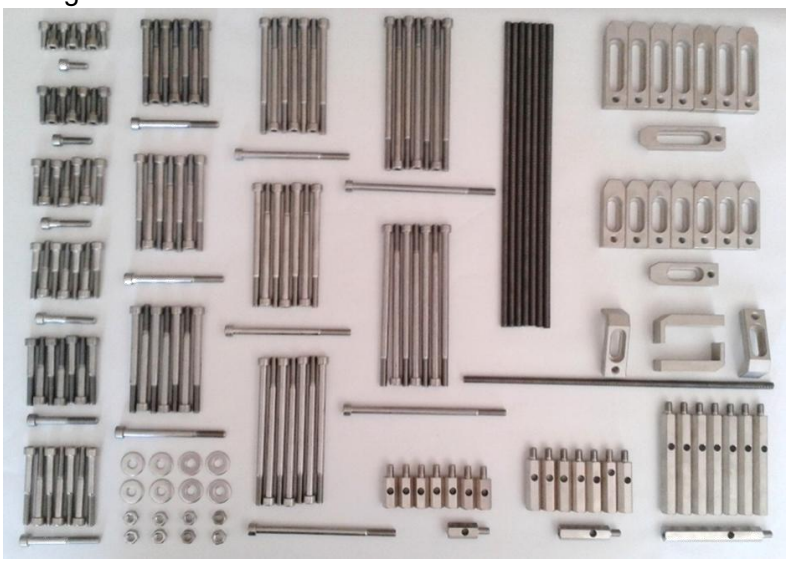

Item No.: CTRSS M8x320
Clamping threaded rods stainless steel M8x320mm – 8pcs

Item No.: NSS M8
Nut stainless steel M8 – 8pcs

Item No.: WSS D8
Washer stainless steel Ø=8mm – 8pcs

Item No.: TCSS23x70x12
Top clamp - stainless steel M8, 23x70x12mm hardened – 8pcs

Item No.: TCSS23x90x12
Top clamp - stainless steel M8, 23x90x12mm hardened – 8pcs

Item No.: TCSS22x60x12+18
Top clamp - stainless steel M8, 22x60x12+18mm hardened – 4pcs

Hexagonal connectable support pillars stainless steel with outer and inner thread M8

Item No.: HCSPSSM8L30
L=30mm - 8pcs

Item No.: HCSPSSM8L50
L=50mm - 8pcs

Item No.: HCSPSSM8L100
L=100mm - 8pcs

Item No.: PBSCESS
Plastic box for set of clamping elements stainless steel – empty, 390x340x205mm

Possible to order individual elements from set separately. We can provide different sizes of clamps and clamping screws with hexagon socket head in different lengths, diameters and in stainless finish.

Erowa®, ITS® are registered Trade Marks of EROWA AG.
MACRO®, System 3R® are registered Trade Marks of System 3R International AB.

ELERO, s.r.o.
Považská Teplá 28
017 05 Považská Bystrica
Slovakia

Tel.: 00421 42 4331991-2
Mobile: 00421 907 411 787
Fax/Tel.: 00421 42 4331990
E-mail: elero@elero.sk www.elero.sk

High-precision clamping system for EDM wire cutters

Item No.: SCESSM6
Set - 181 pieces of clamping elements stainless steel M6 - screws, nuts, washers, clamps and hexagonal support pillars in practical box





Set consist of:

Clamping screws stainless steel M6 with hexagon socket head

Item No.:
CSSS M6x20mm – 8pcs
CSSS M6x30mm – 8pcs
CSSS M6x40mm – 8pcs
CSSS M6x50mm – 8pcs
CSSS M6x60mm – 8pcs
CSSS M6x70mm – 8pcs
CSSS M6x80mm – 8pcs
CSSS M6x90mm – 8pcs
CSSS M6x100mm – 8pcs
CSSS M6x110mm – 8pcs
CSSS M6x120mm – 8pcs
CSSS M6x140mm – 8pcs
CSSS M6x150mm – 8pcs
CSSS M6x160mm – 8pcs



Item No.: CTRSS M6x320
Clamping threaded rods stainless steel M6x320mm – 8pcs

Item No.: NSS M6
Nut stainless steel M6 – 8pcs

Item No.: WSS D6
Washer stainless steel Ø=6mm – 8pcs

Item No.: TCSS23x70x12/M6
Top clamp - stainless steel M6, 23x70x12mm hardened – 8pcs

Item No.: TCSS23x90x12/M6
Top clamp - stainless steel M6, 23x90x12mm hardened – 8pcs

Item No.: TCSS22x60x12+18/M6
Top clamp - stainless steel M6, 22x60x12+18mm hardened – 4pcs

Hexagonal connectable support pillars stainless steel with outer and inner thread M6

Item No.: HCSPSSM6L30
L=30mm - 8pcs

Item No.: HCSPSSM6L50
L=50mm - 8pcs

Item No.: HCSPSSM6L100
L=100mm - 8pcs

Item No.: PBSCESS
Plastic box for set of clamping elements stainless steel – empty, 390x340x205mm

Possible to order individual elements from set separately. We can provide different sizes of clamps and clamping screws with hexagon socket head in different lengths, diameters and in stainless finish.

Erowa®, ITS® are registered Trade Marks of EROWA AG.
MACRO®, System 3R® are registered Trade Marks of System 3R International AB.

ELERO, s.r.o.
Považská Teplá 28
017 05 Považská Bystrica
Slovakia

Tel.: 00421 42 4331991-2
Mobile: 00421 907 411 787
Fax/Tel.: 00421 42 4331990
E-mail: elero@elero.sk www.elero.sk

High-precision clamping system for EDM wire cutters

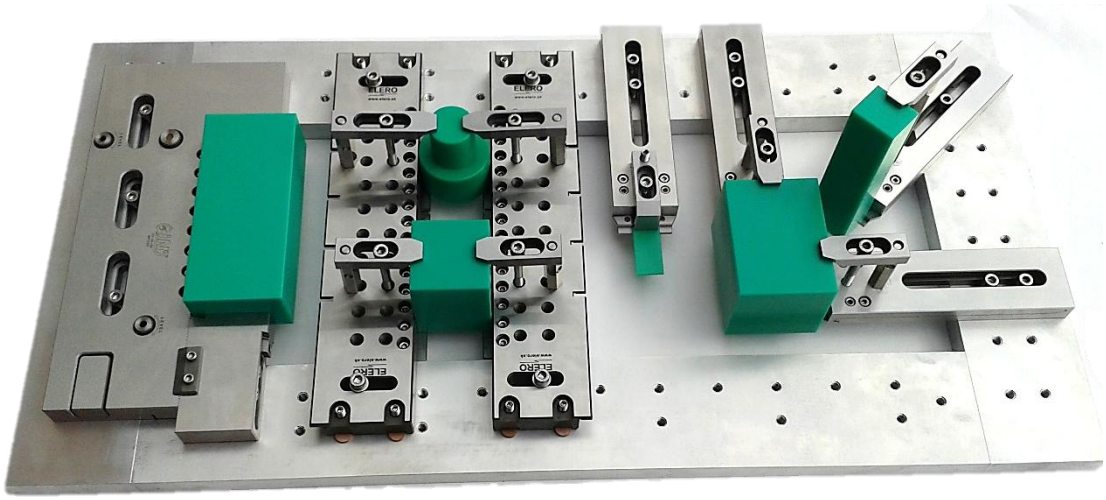

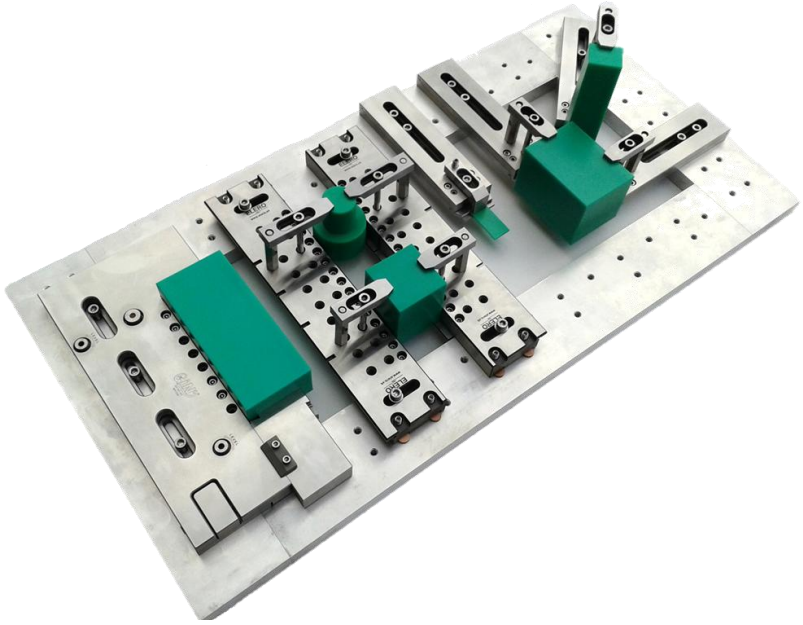

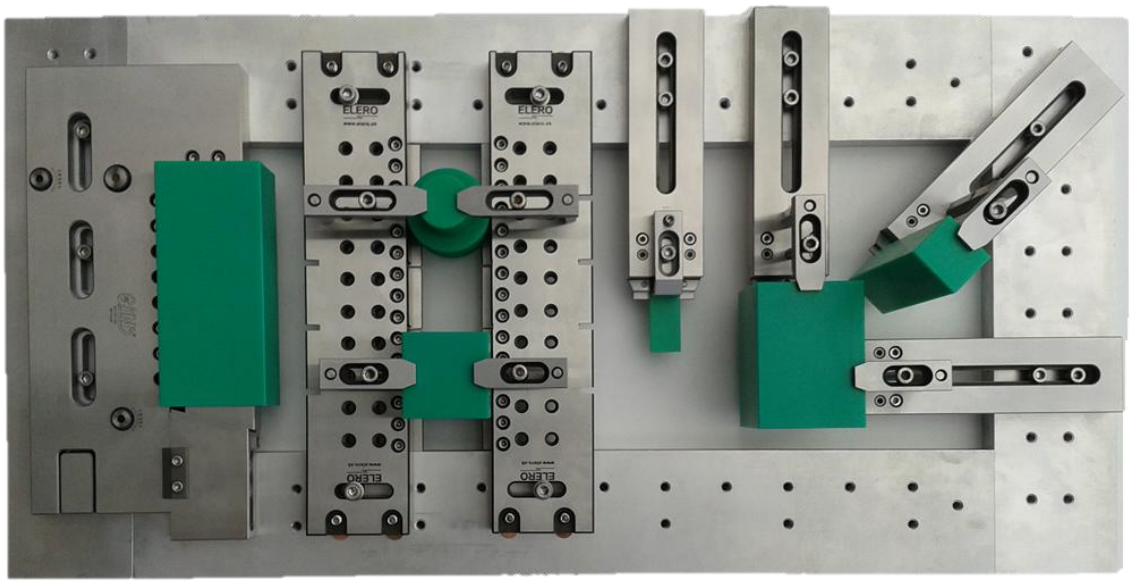

Erowa®, ITS® are registered Trade Marks of EROWA AG.
MACRO®, System 3R® are registered Trade Marks of System 3R International AB.

ELERO
Equipment for EDM
Potreby pre elektroeróziu

ELERO, s.r.o.
Považská Teplá 28
017 05 Považská Bystrica
Slovakia

Tel.: 00421 42 4331991-2
Mobile: 00421 907 411 787
Fax/Tel.: 00421 42 4331990
E-mail: elero@elero.sk www.elero.sk

High-precision clamping system for EDM wire cutters

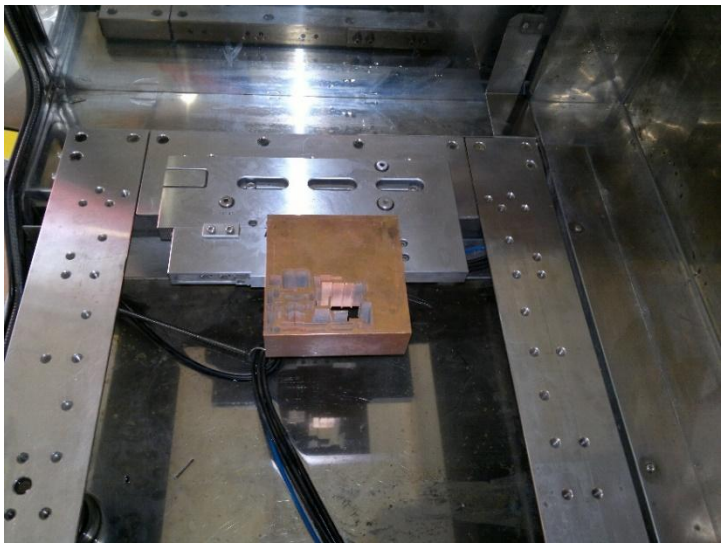

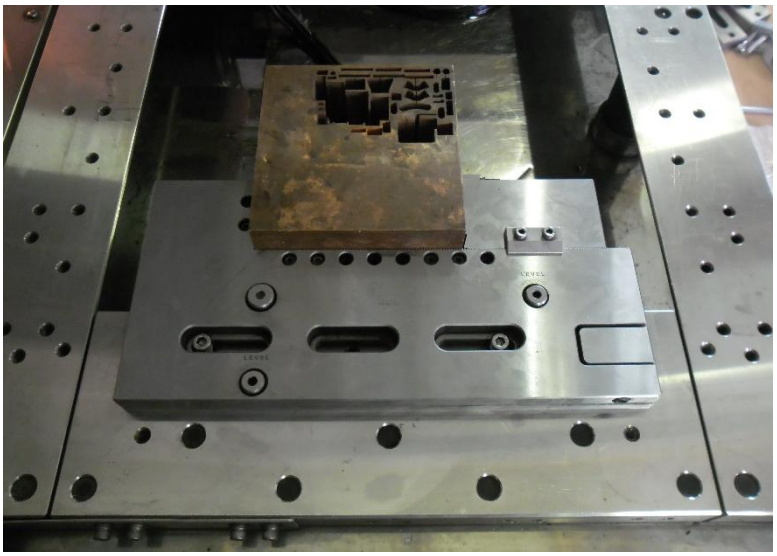



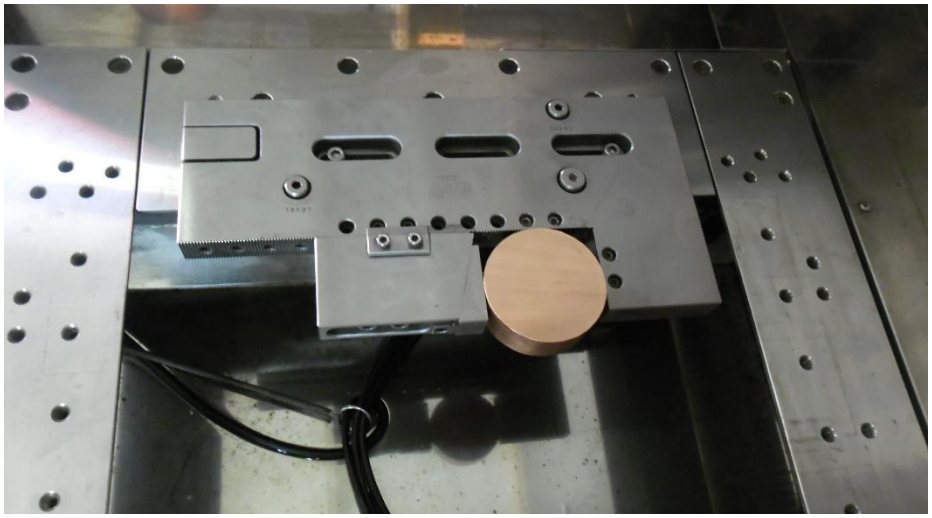

53145-02/WPV320
High-precision stainless steel vise with 3D micro adjusting in 3 axis, clamping range 0-190mm

Erowa®, ITS® are registered Trade Marks of EROWA AG.
MACRO®, System 3R® are registered Trade Marks of System 3R International AB.

ELERO, s.r.o.
Považská Teplá 28
017 05 Považská Bystrica
Slovakia

Tel.: 00421 42 4331991-2
Mobile: 00421 907 411 787
Fax/Tel.: 00421 42 4331990
E-mail: elero@elero.sk www.elero.sk

High-precision clamping system for EDM wire cutters

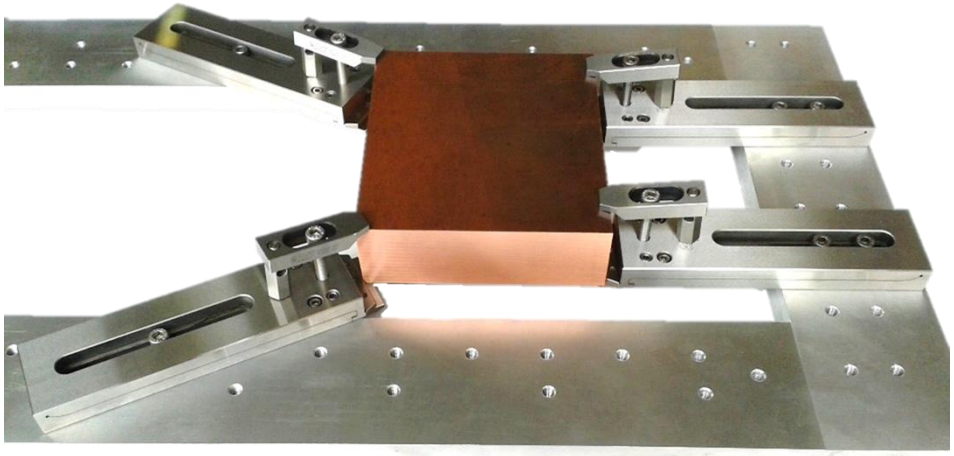

4x MACSS60X220 Adjustable clamp - stainless steel 60x220+5mm, M8, with micro adjusting, clamping in level Z=0mm

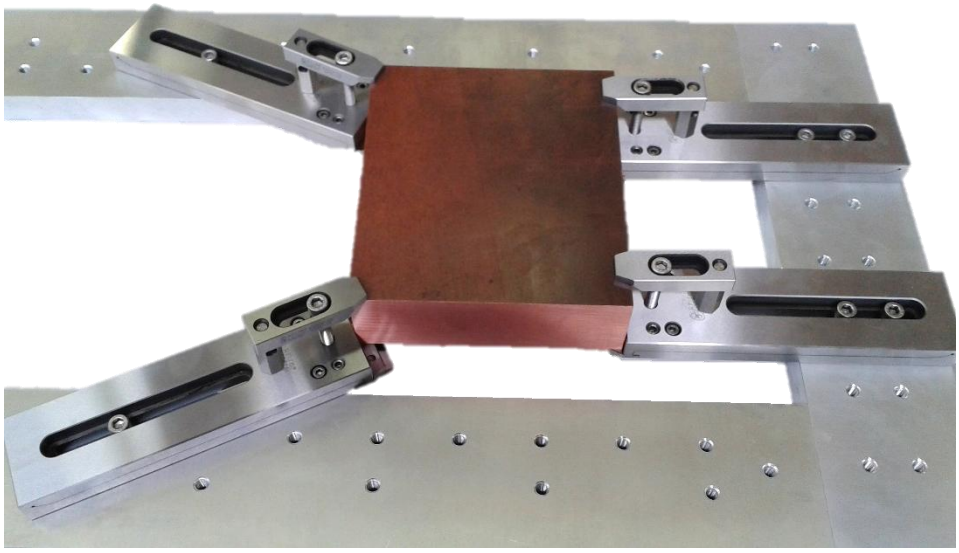

4x MACSS60X220 Adjustable clamp - stainless steel 60x220+5mm, M8, with micro adjusting, clamping in level Z=+5mm

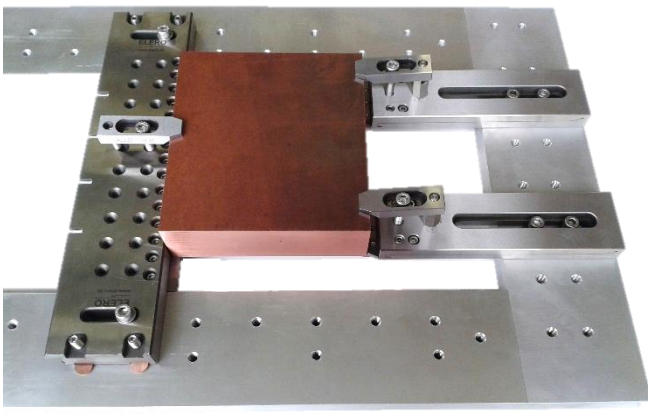

1x DSRSSM8 Double sided ruler stainless steel M8 resp. M6 + 2x MACSS60X220 Adjustable clamp - stainless steel 60x220+5mm, M8, with micro adjusting, clamping in level Z=0mm

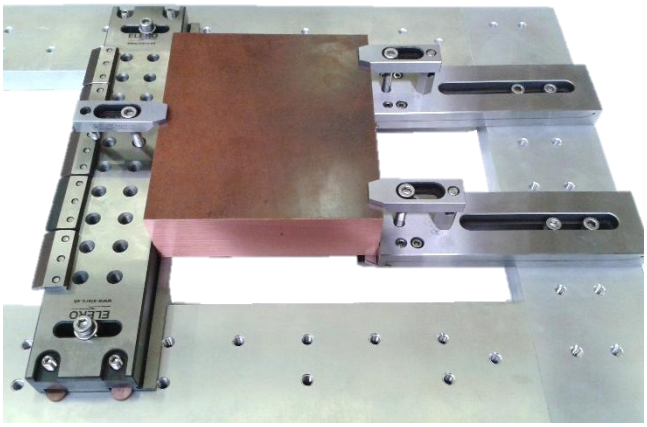

1x DSRSSM8 Double sided ruler stainless steel M8 resp. M6 + 2x MACSS60X220 Adjustable clamp - stainless steel 60x220+5mm, M8, with micro adjusting, clamping in level Z=+5mm

Erowa®, ITS® are registered Trade Marks of EROWA AG.
MACRO®, System 3R® are registered Trade Marks of System 3R International AB.

ELERO
Equipment for EDM
Potreby pre elektroeróziu

ELERO, s.r.o.
Považská Teplá 28
017 05 Považská Bystrica
Slovakia

Tel.: 00421 42 4331991-2
Mobile: 00421 907 411 787
Fax/Tel.: 00421 42 4331990
E-mail: elero@elero.sk www.elero.sk

High-precision clamping system for EDM wire cutters

2x DSRSSM8 C = ? mm
Double sided ruler stainless steel Z=0mm also Z=+5mm, clamping distance C = to dimensions of EDM wire cutter working table, with micro-adjusting. Option M8, alternatively M6, …

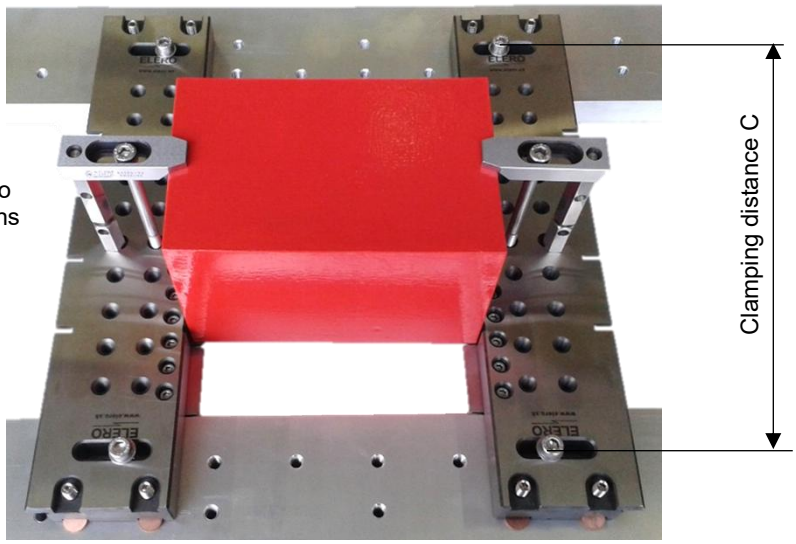

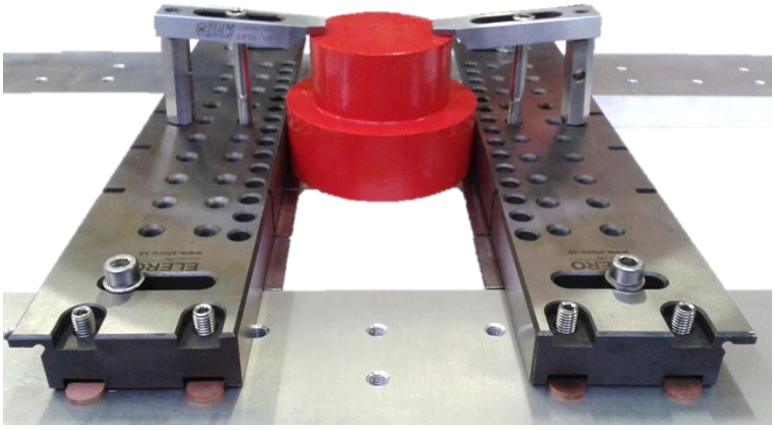

2x DSRSSM8 C = ? mm
Double sided ruler stainless steel with micro-adjusting. Option M8, alternatively M6, …
Clamping in level Z=0mm

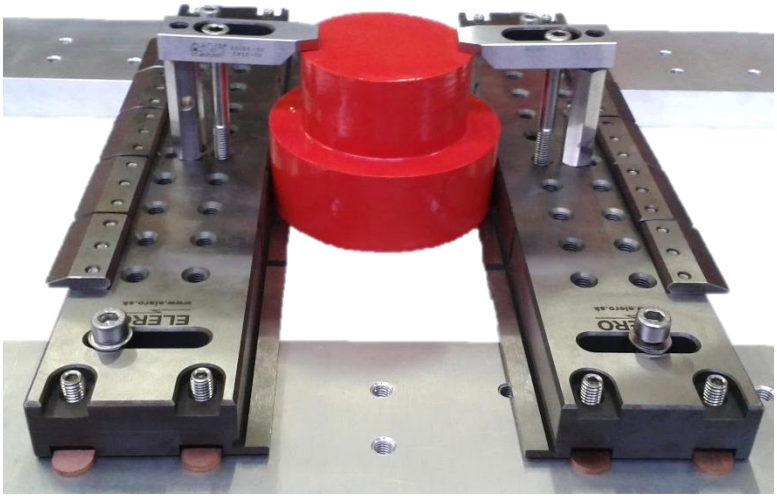

2x DSRSSM8 C = ? mm
Double sided ruler stainless steel with micro-adjusting. Option M8, alternatively M6, …
Clamping in level Z=+5mm



MACSS60X220
Adjustable clamp - stainless steel 60x220+5mm, M8, with micro adjusting, Z=0 also Z=+5mm

Erowa®, ITS® are registered Trade Marks of EROWA AG.
MACRO®, System 3R® are registered Trade Marks of System 3R International AB.

ELERO, s.r.o.
Považská Teplá 28
017 05 Považská Bystrica
Slovakia

Tel.: 00421 42 4331991-2
Mobile: 00421 907 411 787
Fax/Tel.: 00421 42 4331990
E-mail: elero@elero.sk www.elero.sk

High-precision clamping system for EDM wire cutters

Item No.: EL-T0160

Prism holder for round and square pieces. Clamping range Ø10-160mm, □ 160x160mm.
Especially suitable for use in a vise 53145-02/WPV320 with the possibility of 3D micro-adjusting.
Or it is possible to mount directly on the working table of wire cutting machines.

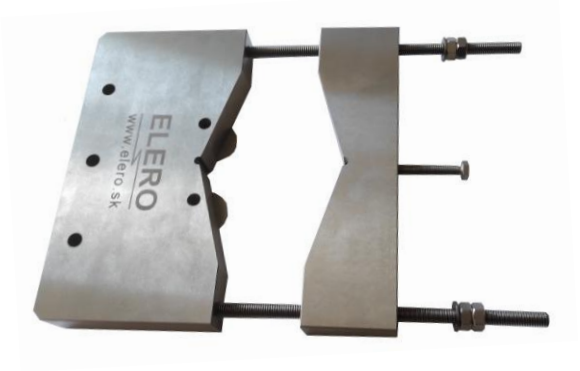

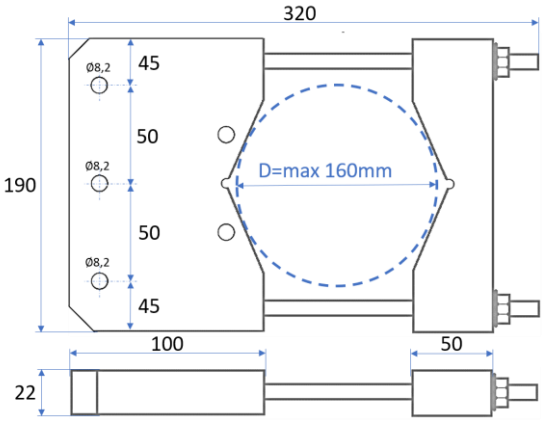

It is among the 7 best-selling clamps for wire cutters

Item No.: EDM 6D 22

Retaining magnets with extreme force for EDM.
Coated against corrosion.
Dimensions of magnets: D22 x 9 mm (resp. D20 x 8mm).
Set: 6 pcs of magnets in practical box.



It is among the 7 best-selling clamps for wire cutters

Item No.: 54060-03/MWL-C

Permanent magnetic chuck for wire-cutting EDM, suitable also for work in water and in liquids.

Units: mm	
Pole pitch	N.W.
2(1+1)	3,7kg

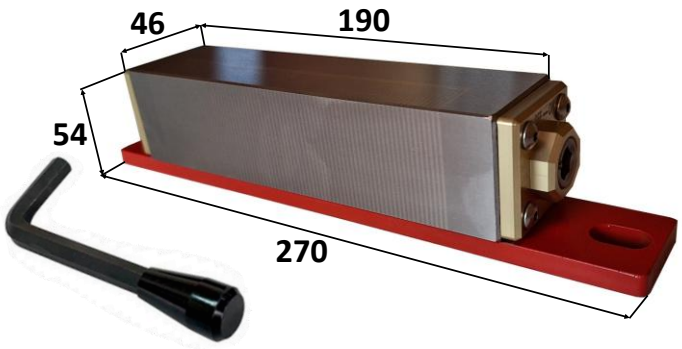

It is among the 7 best-selling clamps for wire cutters

Erowa®, ITS® are registered Trade Marks of EROWA AG.
MACRO®, System 3R® are registered Trade Marks of System 3R International AB.

ELERO, s.r.o.
Považská Teplá 28
017 05 Považská Bystrica
Slovakia

Tel.: 00421 42 4331991-2
Mobile: 00421 907 411 787
Fax/Tel.: 00421 42 4331990
E-mail: elero@elero.sk www.elero.sk

High-precision clamping system for EDM wire cutters

Item No.: 50030-01/PFH-SC04

High-precision stainless dividing device with 4“ 3 – jaw chuck, with fine tuning 360°.
Option to set any angle or use 24-tooth division = 15º ±5”. Rotational accuracy 0,003mm. Repeat clamping accuracy into chuck 0,015mm. Clamping range: I.D.Ø32 - Ø84mm, O.D.Ø3 - Ø90mm. Through hole diameter Ø32mm.



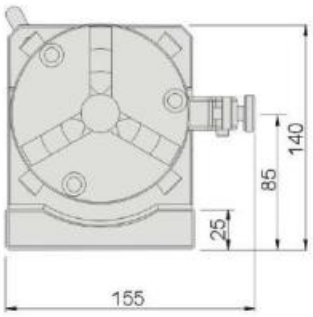

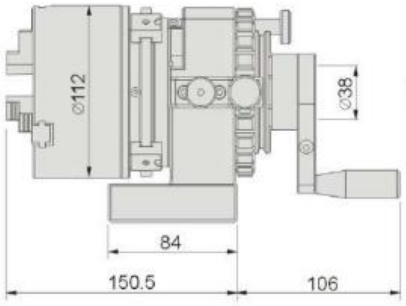

Item No.: 50030-02/PFH-SC05

High-precision stainless dividing device with 5” 3 – jaw chuck, with fine tuning 360º.
Option to set any angle or use 24-tooth division = 15º ±5”. Rotational accuracy 0,003mm. Repeat clamping accuracy into chuck 0,015mm. Clamping range: I.D.Ø35 – Ø110mm, O.D.Ø3 – Ø110mm. Through hole diameter Ø32mm.



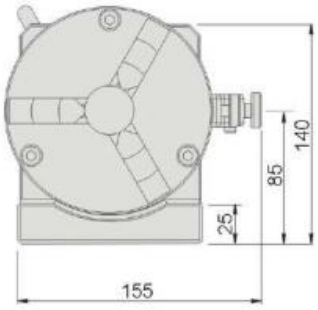

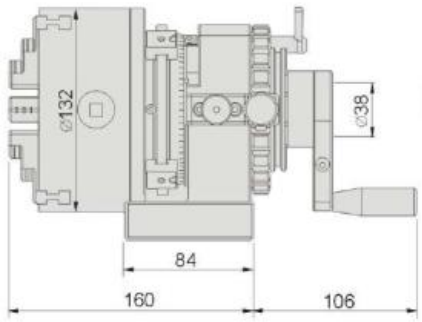

Item No.: 50030-03/04/05 PFH-SER

High-precision stainless dividing device, with fine tuning 360º, with ER20, ER32 or ER50 collets chuck. Option to set any angle or use 24-tooth division = 15º ±5”. Rotational accuracy 0,003mm.



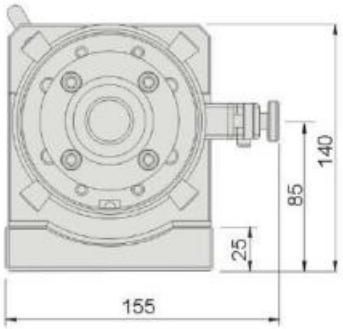

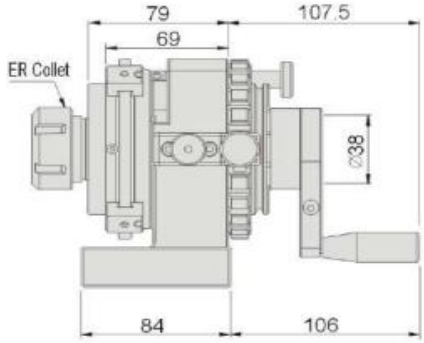

Item No.	Model	ER Collets included	Range Ø mm
50030-03	PFH-SER20	3, 4, 6, 8, 10	1.0 – 13.0
50030-04	PFH-SER32	4, 8, 12, 16, 20	2.0 – 20.0
50030-05	PFH-SER50	12, 18, 20, 30, 34	10.0 – 34.0

Erowa®, ITS® are registered Trade Marks of EROWA AG.
MACRO®, System 3R® are registered Trade Marks of System 3R International AB.

ELERO
Equipment for EDM
Potreby pre elektroeróziu

ELERO, s.r.o.
Považská Teplá 28
017 05 Považská Bystrica
Slovakia

Tel.: 00421 42 4331991-2
Mobile: 00421 907 411 787
Fax/Tel.: 00421 42 4331990
E-mail: elero@elero.sk www.elero.sk

High-precision clamping system for EDM wire cutters

Item No.: 50030-09/10 PFH-EQC

High-precision stainless dividing device, with fine tuning 360º, with manual quick chuck ITS50 or ITS100 compatible with EROW.A. Option to set any angle or use 24-tooth division = 15º ±5". Rotational accuracy 0,003mm. Repeat clamping accuracy 0,003mm.

PFH-EQC50



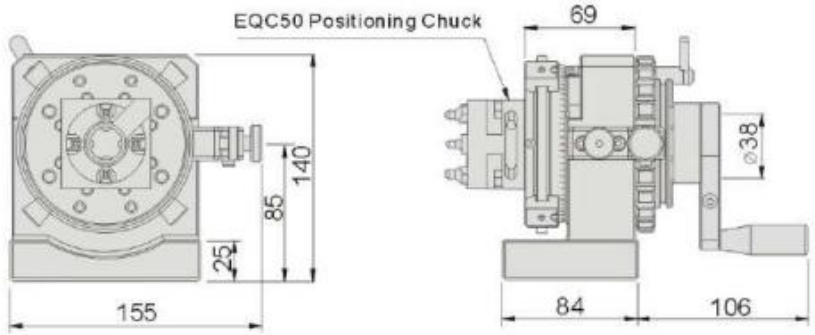

PFH-EQC100



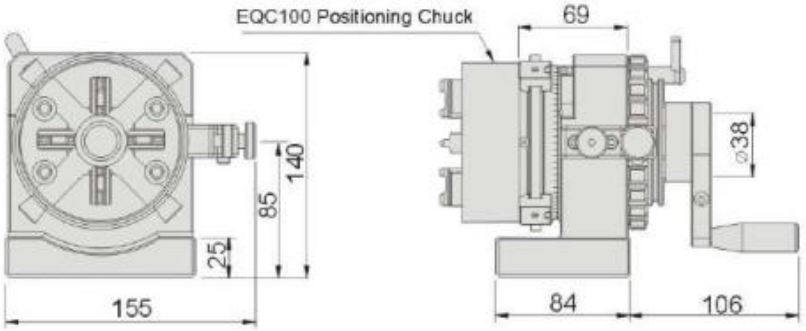

Item No.: 50030-07/08 PFH-3R

High-precision stainless dividing device, with fine tuning 360º, with manual quick chuck 3-R compatible with 3-R. Option to set any angle or use 24-tooth division = 15º ±5". Rotational accuracy 0,003mm. Repeat clamping accuracy 0,003mm.

PFH-3R24



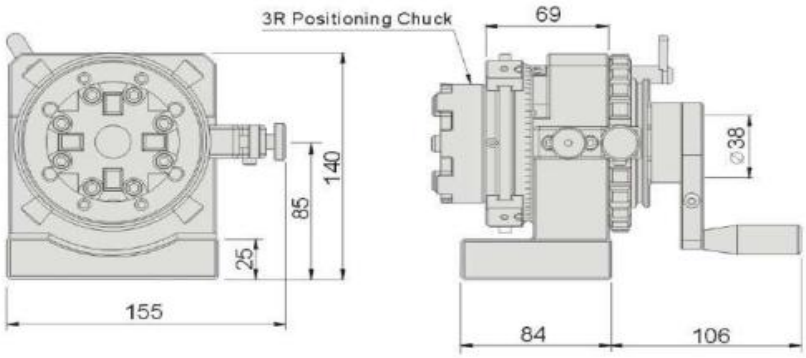

PFH-3R28



Item No.	Model	3R Chuck
50030-07	PFH-3R24	3R24
50030-08	PFH-3R28	3R28

Erowa®, ITS® are registered Trade Marks of EROWA AG.
MACRO®, System 3R® are registered Trade Marks of System 3R International AB.

ELERO, s.r.o.
Považská Teplá 28
017 05 Považská Bystrica
Slovakia

Tel.: 00421 42 4331991-2
Mobile: 00421 907 411 787
Fax/Tel.: 00421 42 4331990
E-mail: elero@elero.sk www.elero.sk

High-precision clamping system for EDM wire cutters

Item No.: 53210-03/04/05 EPF-SER

High-precision stainless dividing device, with fine tuning 360°, with ER20, ER32 or ER50 collets chuck. Option to set any angle or use 24-tooth division = 15º ±5". Rotational accuracy 0,003mm.



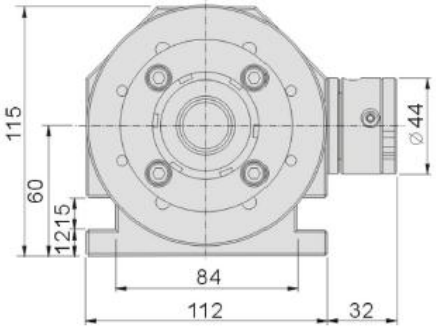

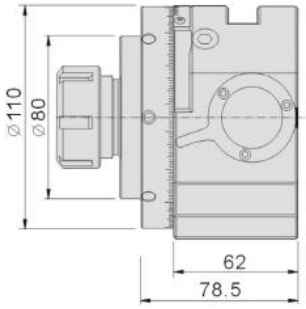

Item No.	Model	ER Collets included	Range Ø mm
53210-03	EPF-SER20	3, 4, 6, 8, 10	1.0 – 13.0
53210-04	EPF-SER32	4, 8, 12, 16, 20	2.0 – 20.0
53210-05	EPF-SER50	12, 18, 20, 30, 34	10.0 – 34.0

Item No.: 53210-09/10 EPF-EQC

High-precision stainless dividing device, with manual quick chuck ITS50 or ITS100 compatible with EROW.A, with fine tuning 360°. Option to set any angle or use 24-tooth division = 15º ±5". Rotational accuracy 0,003mm. Repeat clamping accuracy 0,003mm.

EPF-EQC50



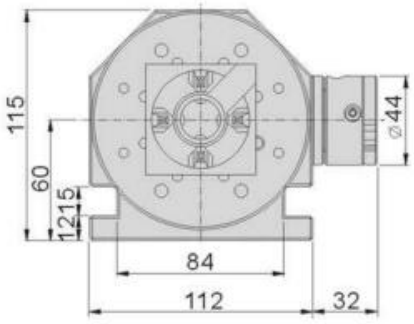

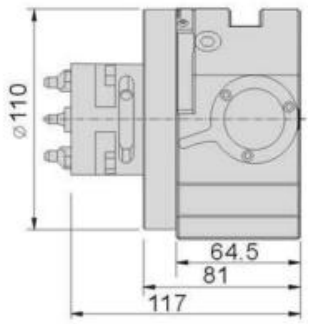

EPF-EQC100



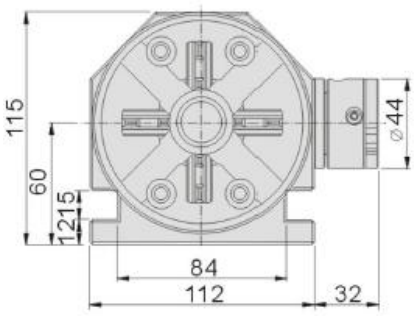

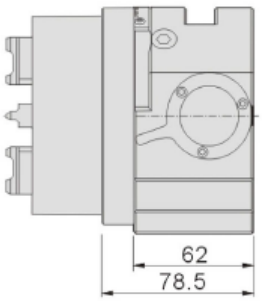

Erowa®, ITS® are registered Trade Marks of EROWA AG.
MACRO®, System 3R® are registered Trade Marks of System 3R International AB.

ELERO
Equipment for EDM
Potreby pre elektroeróziu

ELERO, s.r.o.
Považská Teplá 28
017 05 Považská Bystrica
Slovakia

Tel.: 00421 42 4331991-2
Mobile: 00421 907 411 787
Fax/Tel.: 00421 42 4331990
E-mail: elero@elero.sk www.elero.sk

High-precision clamping system for EDM wire cutters

Item No.: 53210-07/08 EPF-3R

High-precision stainless dividing device with manual quick chuck 3-R, with fine tuning 360°, compatible with 3-R. Option to set any angle or use 24-tooth division = 15º ±5". Rotational accuracy 0,003mm. Repeat clamping accuracy 0,003mm.

EPF-3R24



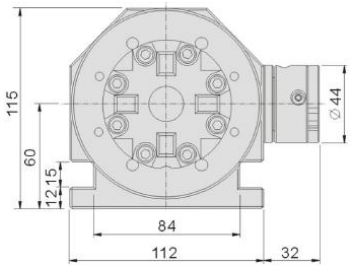

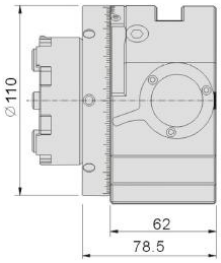

EPF-3R28



Item No.	Model	3R Chuck
53210-07	EPF-3R24	3R24
53210-08	EPF-3R28	3R28

Item No.: EL-V0004

Dividing device with manual quick chuck ITS100 compatible with EROW.A, tilting +90°/-10°, with fine tuning 360°. Option to set any angle or use 1 of 3 dividing plates. Available with 4", 5" or 6" 3-jaw chuck.

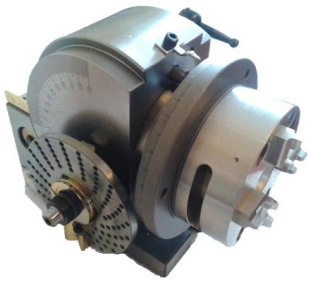







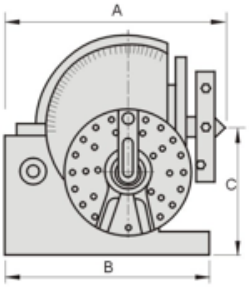

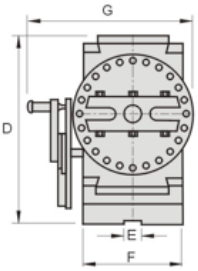

Optional accessory:
4" or 5" 3-jaw chuck (for BS0)
5" or 6" 3-jaw chuck (for BS1)

Order No.	Model	A	B	C	D	E	F	G
65500-01	BS0	189	160	100	173	16	91	140
65500-02	BS1	293	210	128	220	16	114	156

Device is not stainless steel made! After every use in water it's necessary to dry it, clean it and apply protection oil!

Erowa®, ITS® are registered Trade Marks of EROWA AG.
MACRO®, System 3R® are registered Trade Marks of System 3R International AB.

ELERO, s.r.o.
Považská Teplá 28
017 05 Považská Bystrica
Slovakia

Tel.: 00421 42 4331991-2
Mobile: 00421 907 411 787
Fax/Tel.: 00421 42 4331990
E-mail: elero@elero.sk www.elero.sk

High-precision clamping system for EDM wire cutters

Item No.: EL-3MV0004

Dividing device with manual quick chuck 3-R compatible with 3-R, tilting +90°/-10°, with fine tuning 360°. Option to set any angle or use 1 of 3 dividing plates. Available with 4”, 5” or 6” 3-jaw chuck.





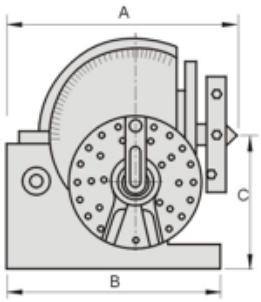

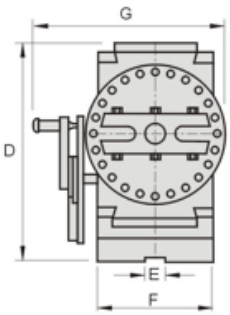

Optional accessory:
4“ or 5“ 3-jaw chuck (for BS0)
5“ or 6“ 3-jaw chuck (for BS1)

Item No.	Model	A	B	C	D	E	F	G
65500-01	BS0	189	160	100	173	16	91	140
65500-02	BS1	293	210	128	220	16	114	156

Device is not stainless steel made! After every use in water it’s necessary to dry it, clean it and apply protection oil!

Item No.: EL-V0006

Manual dividing device, stainless steel, with manual quick chuck ITS100 compatible with EROW.A. Rotation accuracy 0,02mm.



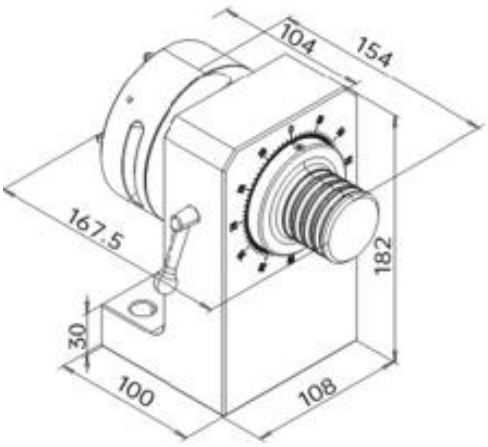

Erowa®, ITS® are registered Trade Marks of EROWA AG.
MACRO®, System 3R® are registered Trade Marks of System 3R International AB.

ELERO, s.r.o.
Považská Teplá 28
017 05 Považská Bystrica
Slovakia

Tel.: 00421 42 4331991-2
Mobile: 00421 907 411 787
Fax/Tel.: 00421 42 4331990
E-mail: elero@elero.sk www.elero.sk

High-precision clamping system for EDM wire cutters

Item No.: EL-3MV0006

Manual dividing device, stainless steel, with 3-R manual quick chuck compatible with 3-R.
Rotation accuracy 0,02mm.





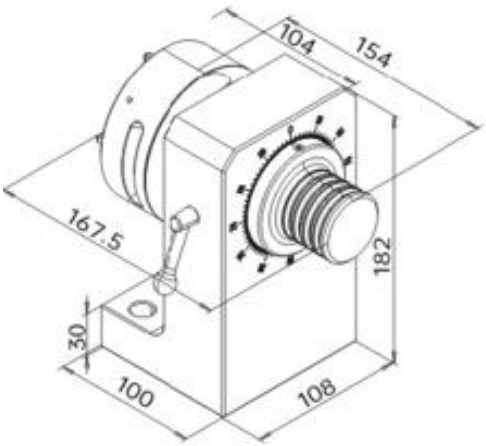

Item No.: EL-V0006-UCH

Manual dividing device, stainless steel, with 4” 3-jaw chuck.
Clamping range: in Ø32 - Ø84mm, out Ø3 - Ø90mm.
Rotation accuracy 0,03mm.





Erowa®, ITS® are registered Trade Marks of EROWA AG.
MACRO®, System 3R® are registered Trade Marks of System 3R International AB.

ELERO, s.r.o.
Považská Teplá 28
017 05 Považská Bystrica
Slovakia

Tel.: 00421 42 4331991-2
Mobile: 00421 907 411 787
Fax/Tel.: 00421 42 4331990
E-mail: elero@elero.sk www.elero.sk

High-precision clamping system for EDM wire cutters

Stainless scroll chucks





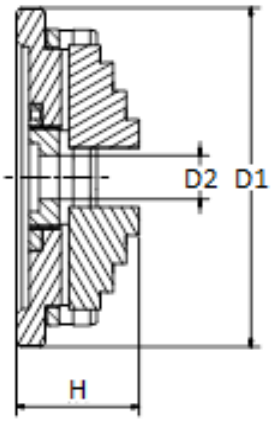

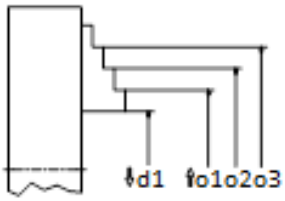

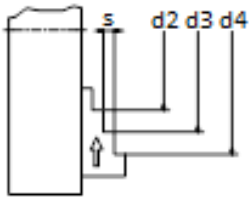

Item no.:	SSSC35	SSSC55	SSSC70	SSSC100	SSSC140	SSSC155	SSSC160
D1	35	55,5	69,5	119	138	153	159
D2	12	11	8,2	15,2	58	75	23
H	18,5	29,8	29,5	42,7	43,6	43,6	56,8
d1	1 – 14	1 – 16	1 – 20	1 – 40	1 – 58	1 – 75	1 - 56
d2	20 – 32	12 – 24	15,4 – 32	28 – 60	32 – 84	40 – 99	30 – 80
d3	-	22 – 34	27,4 – 44	48 – 80	62 – 114	60 – 129	58 – 108
d4	-	32 – 44	39,4 - 56	68 – 100	92 – 144	92 – 159	86 -136
s	4,5	3	3	4,5	4,5	4,5	7
o1	11-23	13 – 28	12 – 32	20 – 60	24 – 68	24 – 83	24 – 68
o2	-	23 – 38	24 - 44	40 – 80	54 – 98	54 – 113	52 – 110
o3	-	33 – 48	36 - 56	68 – 100	84 – 128	84 – 143	84 – 128
Weight	85g	280g	380g	1,6kg	2,2kg	2,6kg	5kg
Jaws	Stainless, hardened, reversible, grinded Also possible to order 4-jaws stainless scroll chucks						
Flange	Custom made according to customer´s request.						

Erowa®, ITS® are registered Trade Marks of EROWA AG.
MACRO®, System 3R® are registered Trade Marks of System 3R International AB.

ELERO
Equipment for EDM
Potreby pre elektroeróziu

ELERO, s.r.o.
Považská Teplá 28
017 05 Považská Bystrica
Slovakia

Tel.: 00421 42 4331991-2
Mobile: 00421 907 411 787
Fax/Tel.: 00421 42 4331990
E-mail: elero@elero.sk www.elero.sk

High-precision clamping system for EDM wire cutters

Item No.: EL-T0003 Manual quick chuck ITS50 for wire cutting EDM compatible with EROW.A
EL-3MT003 Manual quick chuck for wire cutting EDM compatible with 3-R

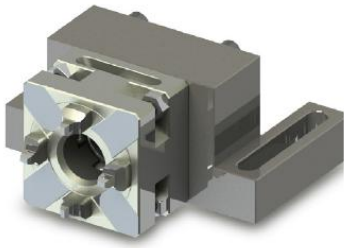

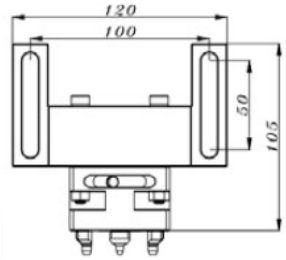

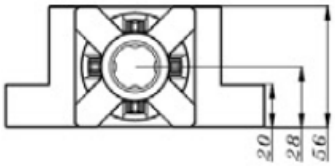

Item No.: EL-T0004 Manual quick chuck ITS50 for wire cutting EDM with micro-adjustable function compatible with EROW.A



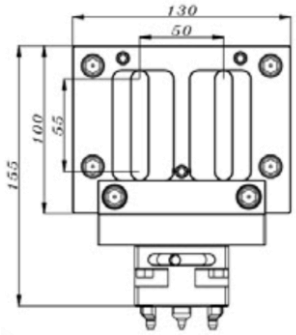

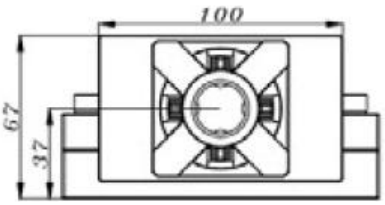

Item No.: EL-T0004-1 Manual quick chuck ITS100 for wire cutting EDM with micro-adjustable function compatible with EROW.A

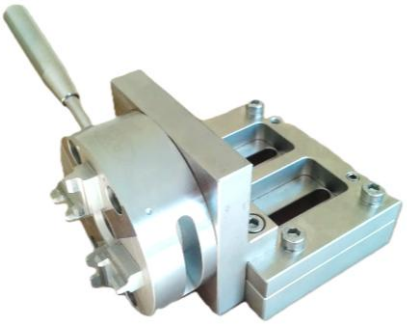

Item No.: EL-3MT004 Manual quick chuck for wire cutting EDM with micro-adjustable function compatible with 3-R



Erowa®, ITS® are registered Trade Marks of EROWA AG.
MACRO®, System 3R® are registered Trade Marks of System 3R International AB.

ELERO
Equipment for EDM
Potreby pre elektroeróziu

ELERO, s.r.o.
Považská Teplá 28
017 05 Považská Bystrica
Slovakia

Tel.: 00421 42 4331991-2
Mobile: 00421 907 411 787
Fax/Tel.: 00421 42 4331990
E-mail: elero@elero.sk www.elero.sk

High-precision clamping system for EDM wire cutters

Item No.: EL-T0001 V shape wire cut EDM holder ITS50, compatible with EROW.A

EL-3MT0001 V shape wire cut EDM holder, compatible with 3-R



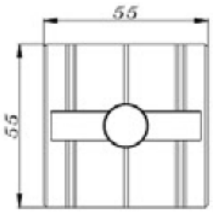

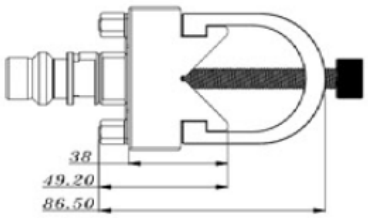

Item No.: EL-T0002

3-axies high precision vise – pendulum, compatible with EROW.A
With microadjusting in 3axis, clamping range 0-100mm,
angle setting 0-360

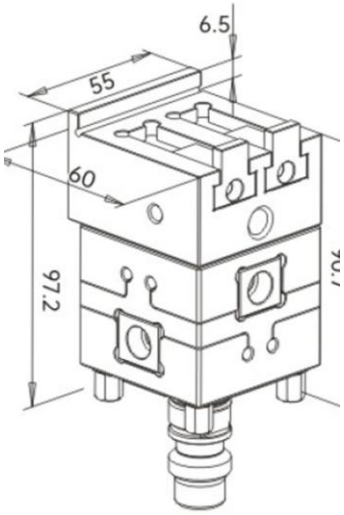



Item No.: EL-3MT0002

3-axies high precision vise – pendulum, compatible with 3-R
With microadjusting in 3axis, clamping range 0-100mm,
angle setting 0-360°

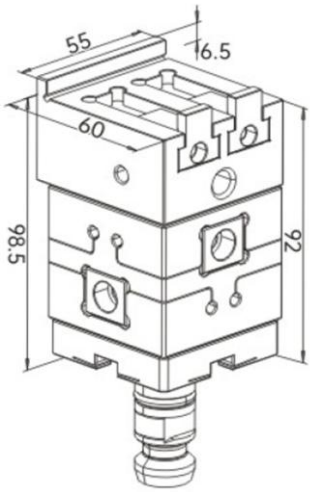



Erowa®, ITS® are registered Trade Marks of EROWA AG.
MACRO®, System 3R® are registered Trade Marks of System 3R International AB.

ELERO, s.r.o.
Považská Teplá 28
017 05 Považská Bystrica
Slovakia

Tel.: 00421 42 4331991-2
Mobile: 00421 907 411 787
Fax/Tel.: 00421 42 4331990
E-mail: elero@elero.sk www.elero.sk

High-precision clamping system for EDM wire cutters

Item No.: EL-T0005 WEDM vise 0-100mm, compatible with EROW.A
Item No.: EL-3MT0005 WEDM vise 0-100mm, compatible with 3-R

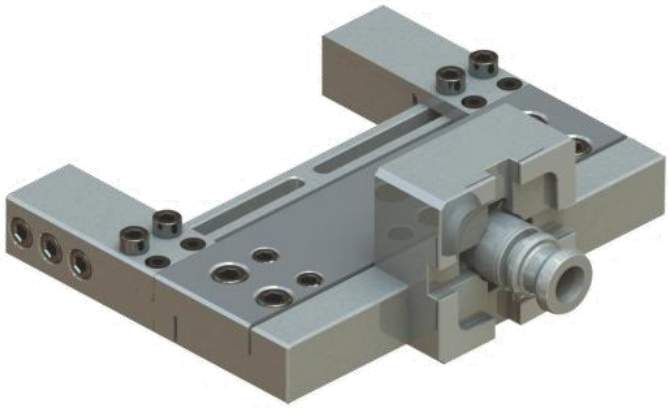

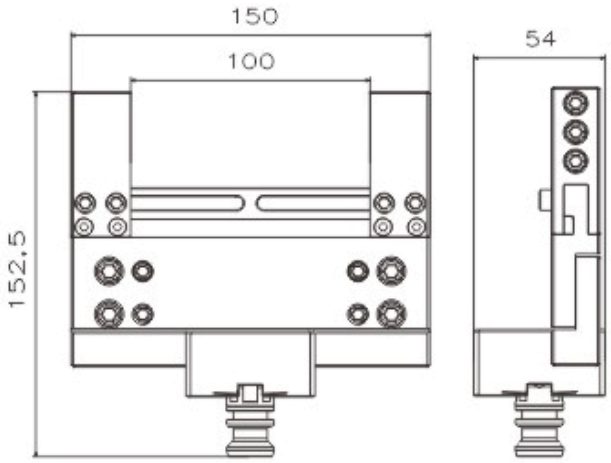

Item No.: EL-T0006 WEDM vise 0-150mm, compatible with EROW.A
Item No.: EL-3MT0006 WEDM vise 0-150mm, compatible with 3

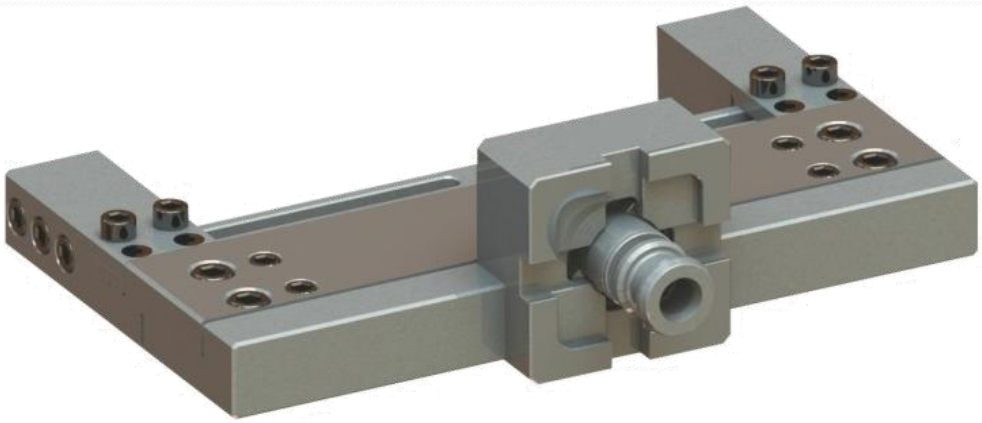

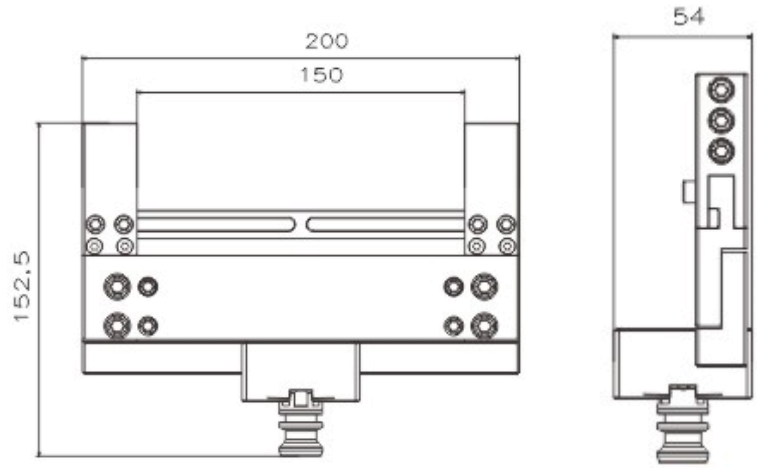

Erowa®, ITS® are registered Trade Marks of EROWA AG.
MACRO®, System 3R® are registered Trade Marks of System 3R International AB.

ELERO
Equipment for EDM
Potreby pre elektroeróziu