ELERO, s.r.o.
Považská Teplá 28
017 05 Považská Bystrica
Slovakia

Tel.: 00421 42 4331991-2
Mobile: 00421 907 411 787
Fax/Tel.: 00421 42 4331990
E-mail: elero@elero.sk www.elero.sk

AUXILIARY ACCESSORIES, CLAMPS AND EQUIPMENT GIN

ELERO, s.r.o.
Považská Teplá 28
017 05 Považská Bystrica
Slovakia

Tel.: 00421 42 4331991-2
Mobile: 00421 907 411 787
Fax/Tel.: 00421 42 4331990
E-mail: elero@elero.sk www.elero.sk

Auxiliary accessories

Item No.: EDM 6D 22

Retaining magnets with extreme force for EDM
- coated against corrosion
- dimensions of magnets: D22 x 9 mm (resp. D20 x 8mm)
- set: 6 pcs of magnets in practical box

Item No.: EDM 2D 55

Magnetic starter preparation
- with threads for mounting
- set: 1 pc 25x55mm and 1 pc 50x55mm

Item No.: 446.253

Cleaning abrasive block (dimensions: approx.. 19x50x80mm)
- rigid porous cleaning abrasive block is used to clean work tables in EDM wire cutters and also for cleaning of workpieces.

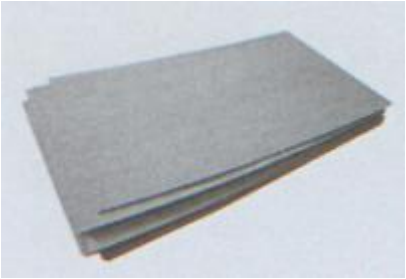

EDM foils
- to fixing workpiece, resp. adjust the position of the workpiece
- foils are electrically non conductive
- dimensions 60x100mm

Item No.: EDM f 0,20
- set 10 pcs of foils - thickness 0,20mm

Item No.: EDM f 0,25
- set 10 pcs of foils - thickness 0,25mm

Item No.: EDM f 0,30
- set 10 pcs foils - thickness 0,30mm

ELERO, s.r.o.
Považská Teplá 28
017 05 Považská Bystrica
Slovakia

Tel.: 00421 42 4331991-2
Mobile: 00421 907 411 787
Fax/Tel.: 00421 42 4331990
E-mail: elero@elero.sk www.elero.sk

Auxiliary accessories

Item No.: DWCM

Digital waterproof conductometer
- to measure a conductivity of water for EDM wire cutters and EDM hole drillers
- measuring range: 0-1999 µS/cm

Item No.: 1003 Wire tension meter with pointer

Portable wire tension meter with pointer
- For EDM wire cutters
- Measuring range: 100-3000g(cN)

Portable optical refractometer
- to measure the mixing ratio of liquids
- e.g. anticorrosion liquids in water of EDM wire cutters, dielectric for EDM hole drillers in water etc. ...

Item No.: Refractometer 0-32%
- measuring range: 0 - 32%
- accuracy 0,2%

Item No.: Refractometer 0-18%
- measuring range: 0 - 18%
- accuracy 0,1%

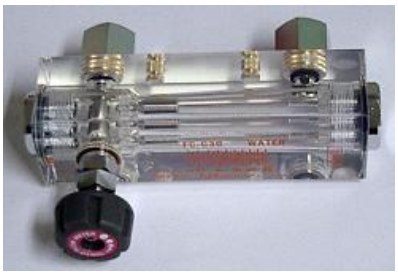

Item No.: Z 041

Adjustable flow meter
- for regulation of upper and lower head flushing in EDM wire cutters

Information about delivery of other auxiliary equipment for EDM are available on request.

ELERO, s.r.o.
Považská Teplá 28
017 05 Považská Bystrica
Slovakia

Tel.: 00421 42 4331991-2
Mobile: 00421 907 411 787
Fax/Tel.: 00421 42 4331990
E-mail: elero@elero.sk www.elero.sk

Clamps and equipment

Top clamp – stainless steel, M8, hardened

Item No.: TCSS23x70x12 Dimensions: 23 x 70 x 12 mm	Item No.: TCSS23x90x12 Dimensions: 23 x 90 x 12 mm	Item No.: TCSS22x60x12+18 Dimensions: 22 x 60 x 12 +18 mm

Stainless hexagonal connectable support pillars with outer and inner thread M8

	Item No.: HCSPSSM8L30	dimensions : M8 x L=30 mm
	Item No.: HCSPSSM8L50	dimensions: M8 x L=50 mm
	Item No.: HCSPSSM8L100	dimensions : M8 x L=100 mm

Item No.: SCESSM8
Set 181pieces of clamping elements stainless steel M8- screws, nuts, washers, clamps and hexagonal support pillars in practical box

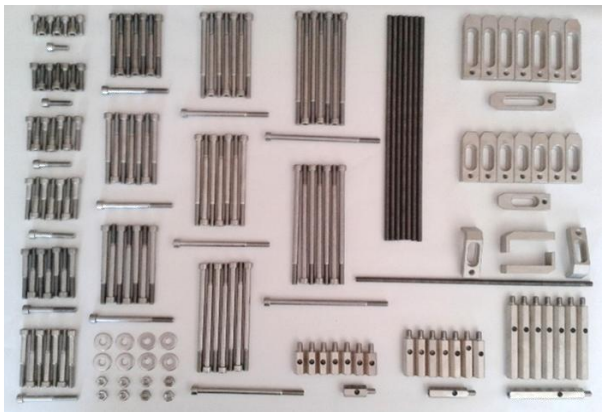

Set consist of:
Clamping screws stainless steel M8 with hexagon socket head

Item No.:	Item No.:	Item No.:
CSSS M8x20mm – 8pcs	CSSS M8x70mm – 8ks	CSSS M8x120mm – 8pcs
CSSS M8x30mm – 8pcs	CSSS M8x80mm – 8ks	CSSS M8x140mm – 8pcs
CSSS M8x40mm – 8pcs	CSSS M8x90mm – 8ks	CSSS M8x150mm – 8pcs
CSSS M8x50mm – 8pcs	CSSS M8x100mm – 8ks	CSSS M8x160mm – 8pcs
CSSS M8x60mm – 8pcs	CSSS M8x110mm – 8ks	

Item No.: NSS M8
Nut stainless steel M8 – 8pcs

Item No.: WSS D8
Washer stainless steel d8mm – 8pcs

Item No.: CTRSSM8x320
Threaded rod stainless steel M8x320m – 8pcs

Item No.: TCSS23x70x12
Top clamp stainless steel M8, 23x70x12mm hardened – 8pcs

Item No.: TCSS23x90x12
Top clamp stainless steel M8, 23x90x12mm hardened – 8pcs

Item No.: TCSS22x60x12+18
Top clamp - stainless steel M8, 22x60x12+18mm hardened – 4pcs

Hexagonal connectable support pillars stainless steel with outer and inner thread M8

Item No.: HCSPSSM8L30
L=30mm – 8pcs

Item No.: HCSPSSM8L50
L=50mm – 8pcs

Item No.: HCSPSSM8100
L=100mm – 8pcs

Item No.: PBSCESS
Plastic box for clamping elements stainless steel - empty, 290x340x205mm

Possible to order individual elements from set separately

We can provide different sizes of clamps and clamping screws with hexagon socket head in different lengths, diameters and in stainless finish.

ELERO, s.r.o.
Považská Teplá 28
017 05 Považská Bystrica
Slovakia

Tel.: 00421 42 4331991-2
Mobile: 00421 907 411 787
Fax/Tel.: 00421 42 4331990
E-mail: elero@elero.sk www.elero.sk

Clamps and equipment

Top clamp – stainless steel, M6, hardened

Item No.: TCSS23x70x12/M6 Dimensions: 23 x 70 x 12 mm	Item No.: TCSS23x90x12/M6 Dimensions: 23 x 90 x 12 mm	Item No.: TCSS22x60x12+18/M6 Dimensions: 22 x 60 x 12 +18 mm

Stainless hexagonal connectable support pillars with outer and inner thread M6

	Item No.: HCSPSSM6L30	dimensions : M6 x L=30 mm
	Item No.: HCSPSSM6L50	dimensions: M6 x L=50 mm
	Item No.: HCSPSSM6L100	dimensions : M6 x L=100 mm

Item No.: SCESSM6
Set 181pieces of clamping elements stainless steel M6- screws, nuts, washers, clamps and hexagonal support pillars in practical box

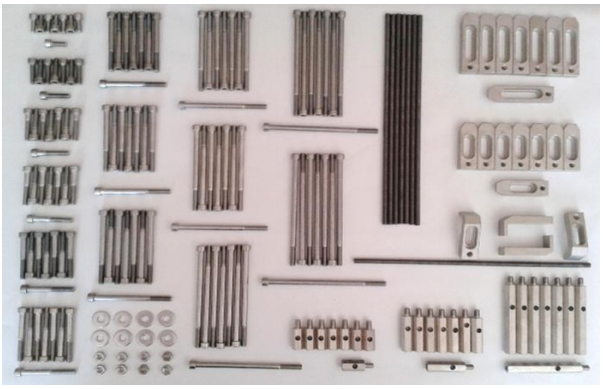

Set consist of:
Clamping screws stainless steel M6 with hexagon socket head

Item No.:
CSSS M6x20mm – 8pcs
CSSS M6x30mm – 8pcs
CSSS M6x40mm – 8pcs
CSSS M6x50mm – 8pcs
CSSS M6x60mm – 8pcs

Item No.:
CSSS M6x70mm – 8ks
CSSS M6x80mm – 8ks
CSSS M6x90mm – 8ks
CSSS M6x100mm – 8ks
CSSS M6x110mm – 8ks

Item No.:
CSSS M6x120mm – 8pcs
CSSS M6x140mm – 8pcs
CSSS M6x150mm – 8pcs
CSSS M6x160mm – 8pcs

Item No.: NSS M6
Nut stainless steel M6 – 8pcs

Item No.: WSS D6
Washer stainless steel d6mm – 8pcs

Item No.: CTRSSM6x320
Threaded rod stainless steel M6x320m – 8pcs

Item No.: TCSS23x70x12/M6
Top clamp stainless steel M6, 23x70x12mm hardened – 8pcs

Item No.: TCSS23x90x12/M6
Top clamp stainless steel M6, 23x90x12mm hardened – 8pcs

Item No.: TCSS22x60x12+18/M6
Top clamp - stainless steel M6, 22x60x12+18mm hardened – 4pcs

Hexagonal connectable support pillars stainless steel with outer and inner thread M6

Item No.: HCSPSSM6L30
L=30mm – 8pcs

Item No.: HCSPSSM6L50
L=50mm – 8pcs

Item No.: HCSPSSM6100
L=100mm – 8pcs

Item No.: PBSCESS
Plastic box for clamping elements stainless steel - empty, 290x340x205mm

Possible to order individual elements from set separately

We can provide different sizes of clamps and clamping screws with hexagon socket head in different lengths, diameters and in stainless finish.

ELERO, s.r.o.
Považská Teplá 28
017 05 Považská Bystrica
Slovakia

Tel.: 00421 42 4331991-2
Mobile: 00421 907 411 787
Fax/Tel.: 00421 42 4331990
E-mail: elero@elero.sk www.elero.sk

Clamps and equipment

Item No.: FTV-0101 Flexible clamping tool for irregular workpieces
The spring pins 37xØ5mm adapt to the irregular shape of the clamped workpiece

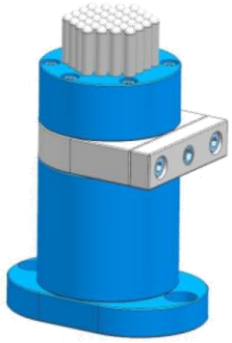

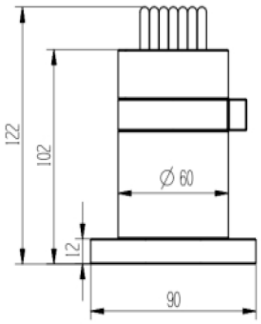

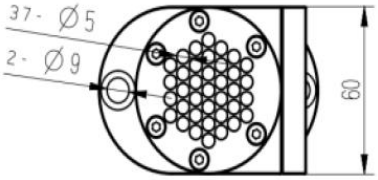

Item No.: FTV-0102 Flexible clamping tool for irregular workpieces
The spring pins 61xØ5mm adapt to the irregular shape of the clamped workpiece

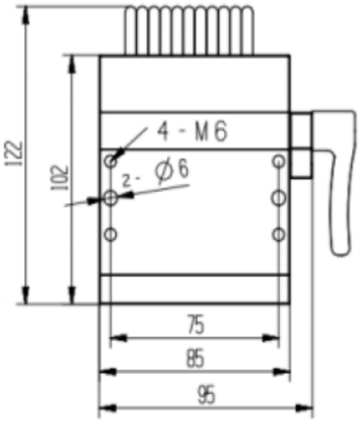

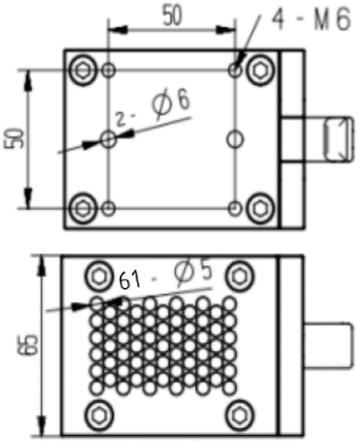

Item No.: FTV-0103 Flexible clamping tool for irregular workpieces
The spring pins 113xØ5mm adapt to the irregular shape of the clamped workpiece

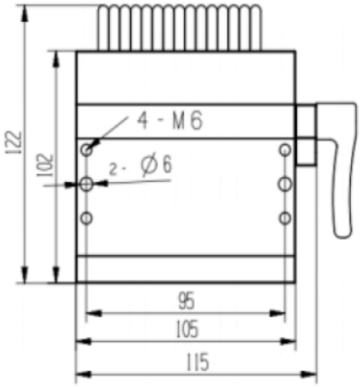

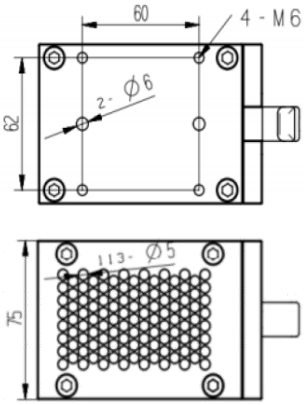

ELERO, s.r.o.
Považská Teplá 28
017 05 Považská Bystrica
Slovakia

Tel.: 00421 42 4331991-2
Mobile: 00421 907 411 787
Fax/Tel.: 00421 42 4331990
E-mail: elero@elero.sk www.elero.sk

Clamps and equipment

Item No.: FTV-0105 Self-centring vise with flexible jaws for clamping of irregular workpieces
The spring pins Ø5mm adapt to the irregular shape of the clamped workpiece

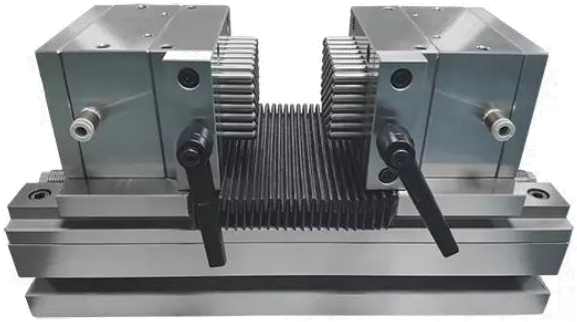

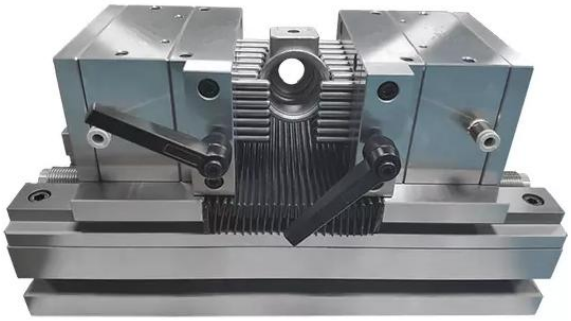

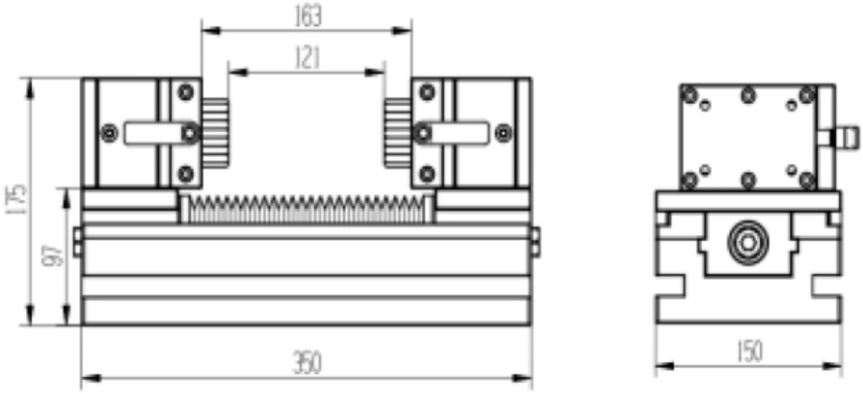

Item No.: FTV-0106 Adjustable flexible tool for clamping of the irregular workpieces
The spring pins Ø5mm adapt to the irregular shape of the clamped workpiece

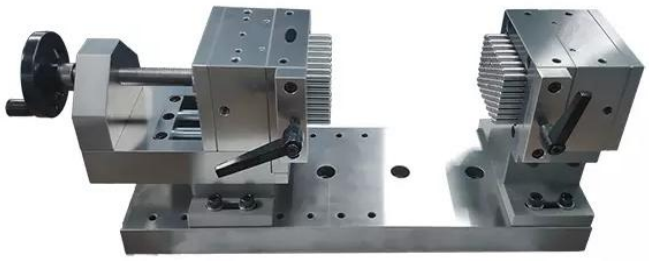

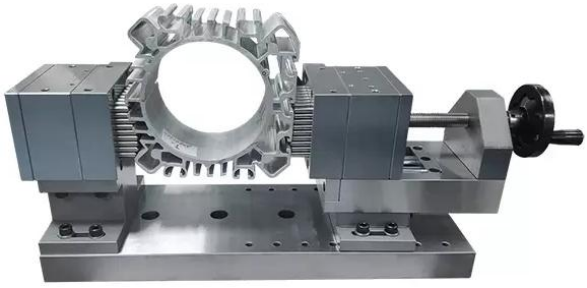

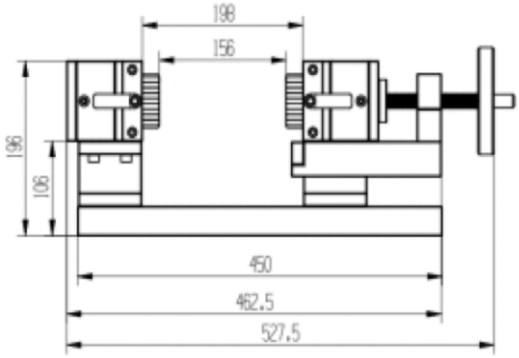

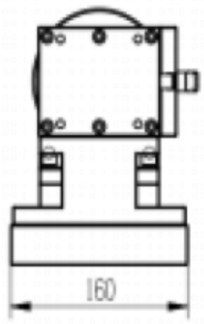

ELERO, s.r.o.
Považská Teplá 28
017 05 Považská Bystrica
Slovakia

Tel.: 00421 42 4331991-2
Mobile: 00421 907 411 787
Fax/Tel.: 00421 42 4331990
E-mail: elero@elero.sk www.elero.sk

Clamps and equipment

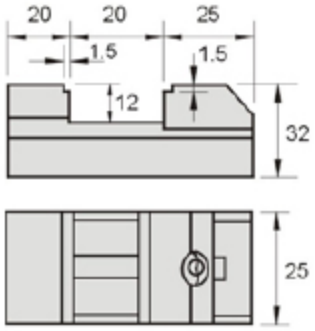

Small high-precision vise
- It can be clamped into larger vices
- Suitable for work in liquids
- Parallelism: 0,003mm/100mm
- Squareness: 0.005mm/100mm
- Net weight 0.3 kg

Item No.: 52910-10/VS10

Item No.: 52720-02/VL10-2 Stainless steel

High-precision vise
- suitable for work in liquids

Material		**SK2**
Parallelism	**within**	**0,003mm/100mm**
Squarenes	**within**	**0,005mm/100mm**
Hardened	**up to**	**HRC55º-60º**

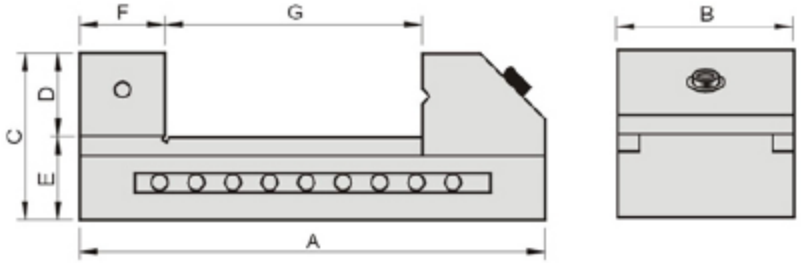

Units: mm

Item No.	Model	A	B	C	D	E	F	G	Net Weight
52910-15	GIN-VS15	100	36	48	20	28	25	0-40	0,9 kg
52910-20	GIN-VS20	150	50	53	25	28	30	0-80	1,6 kg
52910-25	GIN-VS25	175	63	63	32	31	35	0-90	2,9 kg
52910-30	GIN-VS30	190	73	70	35	35	35	0-100	4,3 kg
52910-35	GIN-VS35	235	88	80	40	40	40	0-130	6,8 kg
52910-40	GIN-VS40	245	100	90	45	45	45	0-130	10 kg
52910-50	GIN-VS50	285	125	100	50	50	45	0-160	15 kg

More clamps can be found in the catalogue GIN, or we can offer advice on your request.

ELERO, s.r.o.
Považská Teplá 28
017 05 Považská Bystrica
Slovakia

Tel.: 00421 42 4331991-2
Mobile: 00421 907 411 787
Fax/Tel.: 00421 42 4331990
E-mail: elero@elero.sk www.elero.sk

Clamps and equipment

High-precision vise
- suitable for work in liquids

Material	**SK2**
Parallelism	**within 0,003mm/100mm**
Squareness	**within 0,005mm/100mm**
Hardened	**up to HRC55º-60º**

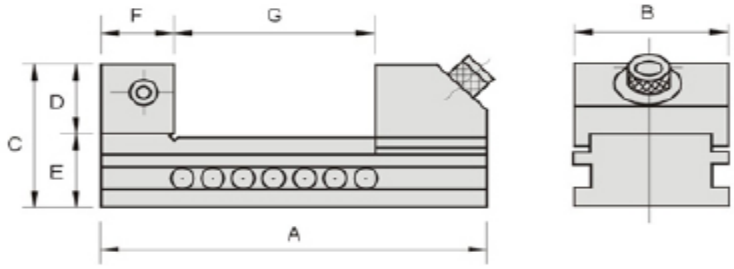

Units: mm

Item No.	Model	A	B	C	D	E	F	G	Net Weight
52920-60	GIN-VS60	330	150	100	50	50	50	0-180	20 kg
52920-80	GIN-VS80	360	200	110	55	55	55	0-205	33 kg

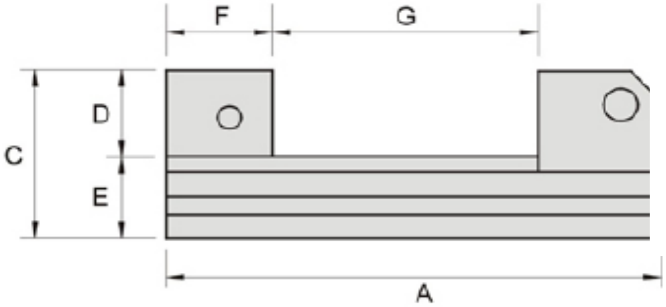

High-precision vise – stainless steel
- suitable for work in liquids

Material	**SUS440**
Parallelism	**within 0,003mm/100mm**
Squareness	**within 0,003mm/100mm**
Hardened	**up to HRC50º-55º**

Units: mm

Item No.	Model	A	B	C	D	E	F	G	Net Weight
52725-20	GIN-VL20	140	50	53	25	28	25	0-75	1,5 kg
52725-30	GIN-VL30	180	72	62	30	32	35	0-100	3,0 kg

More clamps can be found in the catalogue GIN, or we can offer advice on your request.

ELERO, s.r.o.
Považská Teplá 28
017 05 Považská Bystrica
Slovakia

Tel.: 00421 42 4331991-2
Mobile: 00421 907 411 787
Fax/Tel.: 00421 42 4331990
E-mail: elero@elero.sk www.elero.sk

Clamps and equipment

High-precision sine vise

- Model: V-VC-L-CSV
- To achieve various angles
- Suitable for work in liquids
- Material: SKS HRC58°-60°
- Parallelism: within 0,003/100mm
- Squareness: within 0,005/100mm
- Angle tolerance: from 15 sec.

Item No.: 52860/V100

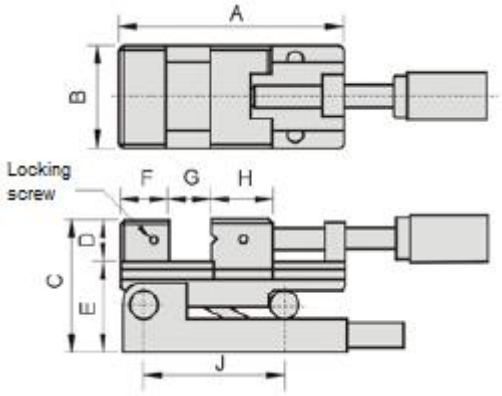

Model:	V100
A	160
B	73
C	93
D	30
E	63
F	33
G	80
H	45
I	M6
J	100
Max. angel	46°
Net Weight	5,6 kg

Item No.: 52870/VC100

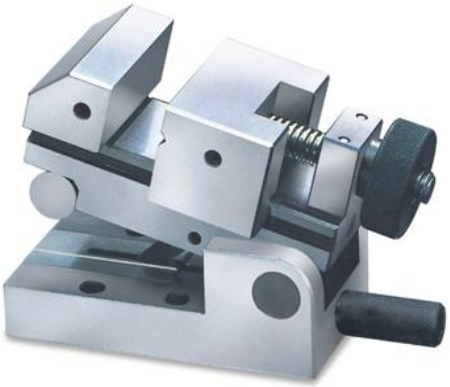

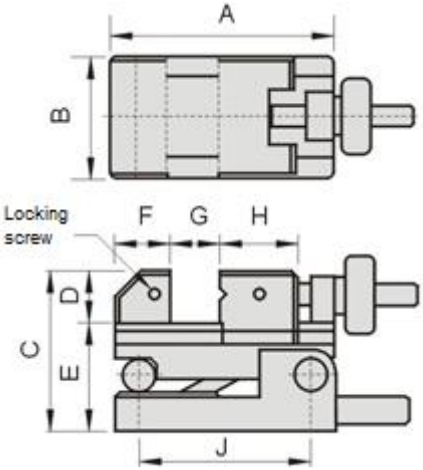

Model:	VC100
A	130
B	73
C	93
D	30
E	63
F	33
G	45
H	45
I	M5
J	100
Max. angel	46°
Net Weight	4,6 kg

More clamps can be found in the catalogue GIN, or we can offer advice on your request

ELERO, s.r.o.
Považská Teplá 28
017 05 Považská Bystrica
Slovakia

Tel.: 00421 42 4331991-2
Mobile: 00421 907 411 787
Fax/Tel.: 00421 42 4331990
E-mail: elero@elero.sk www.elero.sk

Clamps and equipment

High-precision sine vise

- Model: V-VC-L-CSV
- To achieve various angles
- Suitable for work in liquids
- Material: SKS HRC58°-60°
- Parallelism: within 0,003/100mm
- Squareness: within 0,005/100mm
- Angle tolerance: from 15 sec.

Item No.: 52880/L50

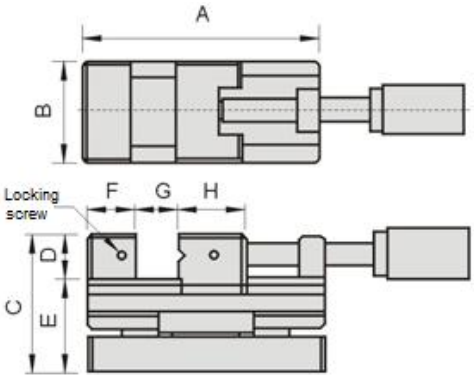

Model:	L50
A	160
B	73
C	93
D	30
E	63
F	33
G	80
H	45
I	M5
Max angle	46°
Net Weight	5,8 kg

Item No.: 52890/CSV100 **- adjustable angle in two axis**

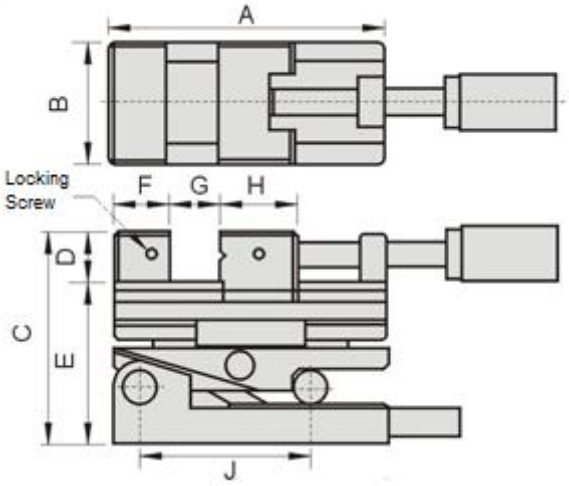

Model:	CSV100
A	160
B	73
C	124
D	30
E	94
F	33
G	80
H	45
I	M5
J	100
Max angle	46°
Net Weight	7,5 kg

More clamps can be found in the catalogue GIN, or we can offer advice on your request.

ELERO, s.r.o.
Považská Teplá 28
017 05 Považská Bystrica
Slovakia

Tel.: 00421 42 4331991-2
Mobile: 00421 907 411 787
Fax/Tel.: 00421 42 4331990
E-mail: elero@elero.sk www.elero.sk

Clamps and equipment

High-precision sine vise

- For very quick and simple angle settings up to 46°
- Suitable for work in liquids
- Parallelism: within 0,005mm
- Vertical adjustment precision: within 0,05mm
- Hardened up to HRC52°-58°

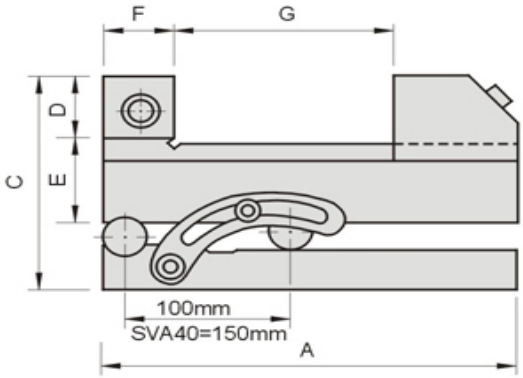

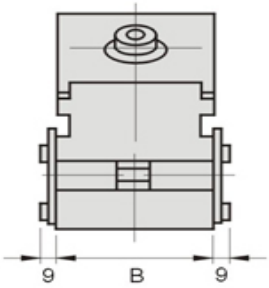

Units: mm

Item No.	Model	A	B	C	D	E	F	G	Net Weight
52940-20	GIN-SVA20	150	48	90	25	28	25	0-75	2,9 kg
52940-25	GIN-SVA25	176	63	96	30	29	30	0-85	4,6 kg
52940-30	GIN-SVA30	190	73	105	35	33	35	0-95	6,4 kg
52940-40	GIN-SVA40	245	98	129	45	45	45	0-125	14,1 kg

High-precision sine universal vise

- Precision graduations for accurate adjustment
- Suitable for work in liquids
- Horizontal swivel through 360°, the unit tilts 45° vertically
- Material: SK2
- Parallelism: within 0,003mm/100mm
- Squareness: within 0,005mm/100mm
- Hardened up to HRC60°

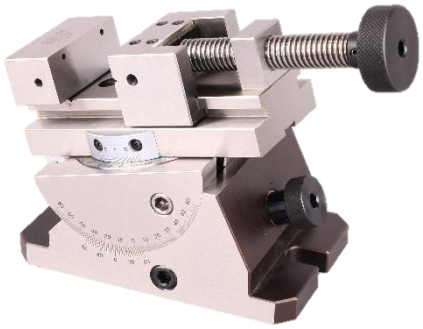

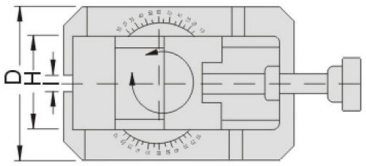

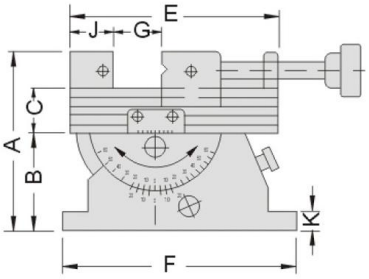

Units: mm

Item No.	Model	A	B	C	D	E	F	G	H	I	J	K	Net Weight
65010-80	GIN-CHM80	137	75	32	110	160	178	0~80	70	16	33	15	14 kg

More clamps can be found in the catalogue GIN, or we can offer advice on your request.

Clamps and equipment

Item No.: 53320/EVH20
Electrode holder
- clamping range 0 - 25mm
- net weight 0,7 kg

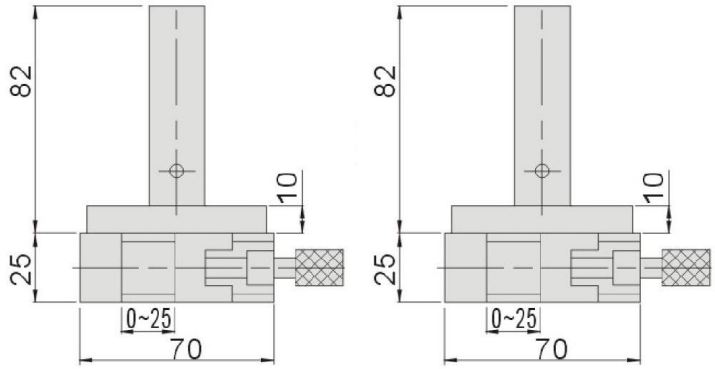

Material	**SUS440**
Parallelism	**within 0,003mm/100mm**
Squareness	**within 0,005mm/100mm**
Hardened	**up to HRC48º-55º**

Item No.: 53300/VH20
Electrode holder – stainless steel
- clamping range 0 - 20mm
- net weight 0,5 kg

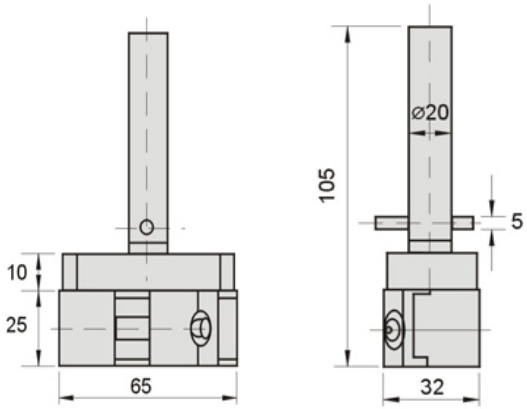

Material		**SUS440**
Parallelism	**within**	**0,003mm/100mm**
Squareness	**within**	**0,005mm/100mm**
Hardened	**up to**	**HRC50º-55º**

More clamps can be found in the catalogue GIN, or we can offer advice on your request.

ELERO, s.r.o.
Považská Teplá 28
017 05 Považská Bystrica
Slovakia

Tel.: 00421 42 4331991-2
Mobile: 00421 907 411 787
Fax/Tel.: 00421 42 4331990
E-mail: elero@elero.sk www.elero.sk

Clamps and equipment

Item No.: 53330/EVH50
Electrode holder – stainless steel
- clamping range 0 - 50mm
- net weight 1,1 kg

Material		**SUS440**
Parallelism	**within**	**0,003mm/100mm**
Squareness	**within**	**0,005mm/100mm**
Hardened	**up to**	**HRC48º-55º**

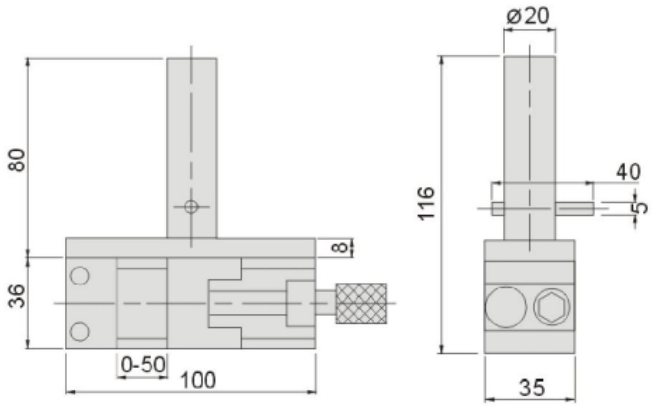

Item No.: 53125/WPV50
High-precision vise – stainless steel
- for EDM wire cutters

- net weight 1,1 kg
- clamping range: max. 50mm
- parallelism: within 0,003mm/100mm
- squareness: within 0,005mm/100mm
- hardened up to HRC45^{O}-55°

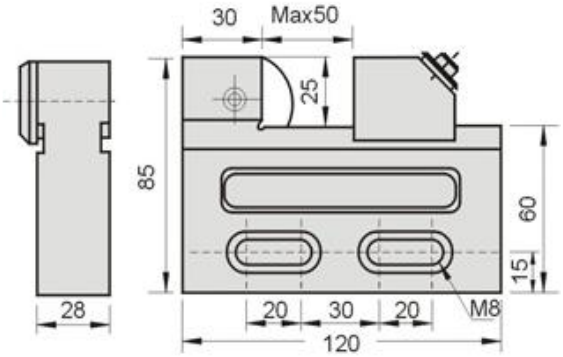

More clamps can be found in the catalogue GIN, or we can offer advice on your request.

ELERO, s.r.o.
Považská Teplá 28
017 05 Považská Bystrica
Slovakia

Tel.: 00421 42 4331991-2
Mobile: 00421 907 411 787
Fax/Tel.: 00421 42 4331990
E-mail: elero@elero.sk www.elero.sk

Clamps and equipment

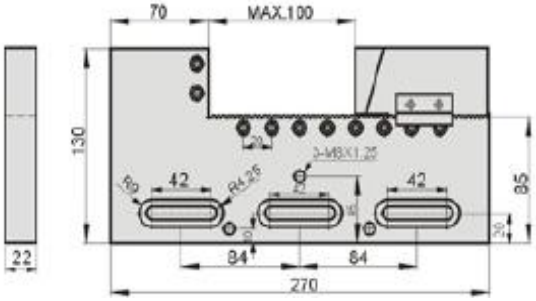

Item No.: 53135/WPV100

High-precision vise – stainless steel
- for EDM wire cutters

- net weight 5,0 kg
- clamping range: max. 100mm
- parallelism: within 0,003/100mm
- squareness: within 0,005/100mm
- hardened up to HRC45^{O}-55°

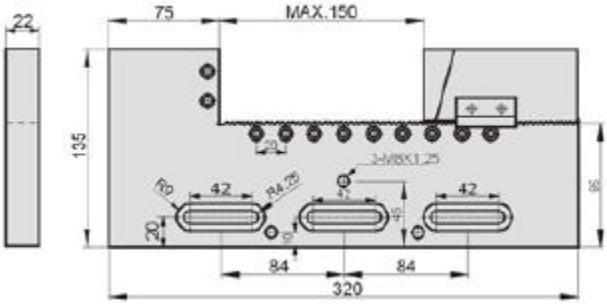

Item No.: 53140/WPV150

High-precision vise – stainless steel
- for EDM wire cutters

- net weight 5,6 kg
- clamping range: max. 150mm
- parallelism: within 0,003/100mm
- squareness: within 0,005/100mm
- hardened up to HRC45^{O}-55°

More clamps can be found in the catalogue GIN, or we can offer advice on your request.

ELERO, s.r.o.
Považská Teplá 28
017 05 Považská Bystrica
Slovakia

Tel.: 00421 42 4331991-2
Mobile: 00421 907 411 787
Fax/Tel.: 00421 42 4331990
E-mail: elero@elero.sk www.elero.sk

Clamps and equipment

Item No.: 53145-02/WPV320

High-precision vise – stainless steel
- for EDM wire cutters
- adjustable in 3 axis (see drawings) with 3D micro adjusting
- strong clamping - can stand high water pressure

- net weight 8,6 kg
- clamping range: 0 - 190mm
- parallelism: within 0,003mm/100mm
- squareness: within 0,005mm/100mm
- hardened up to HRC45°-55°

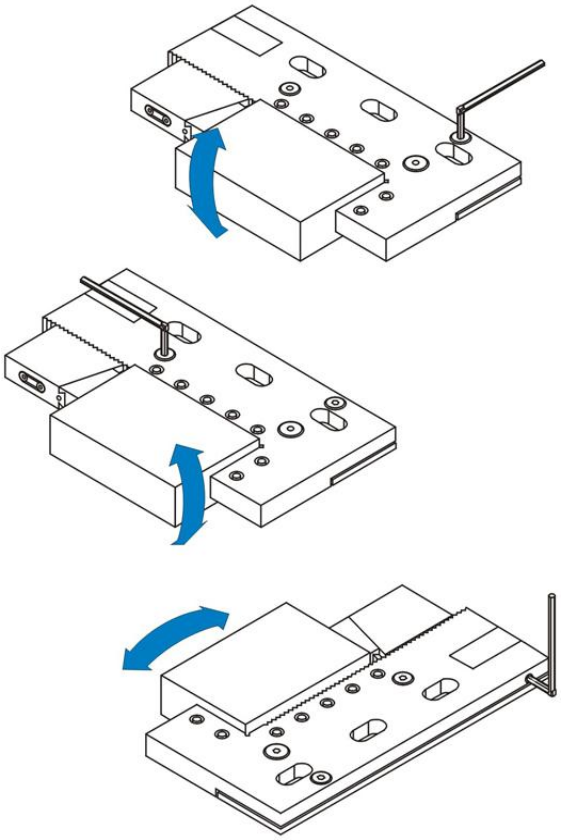

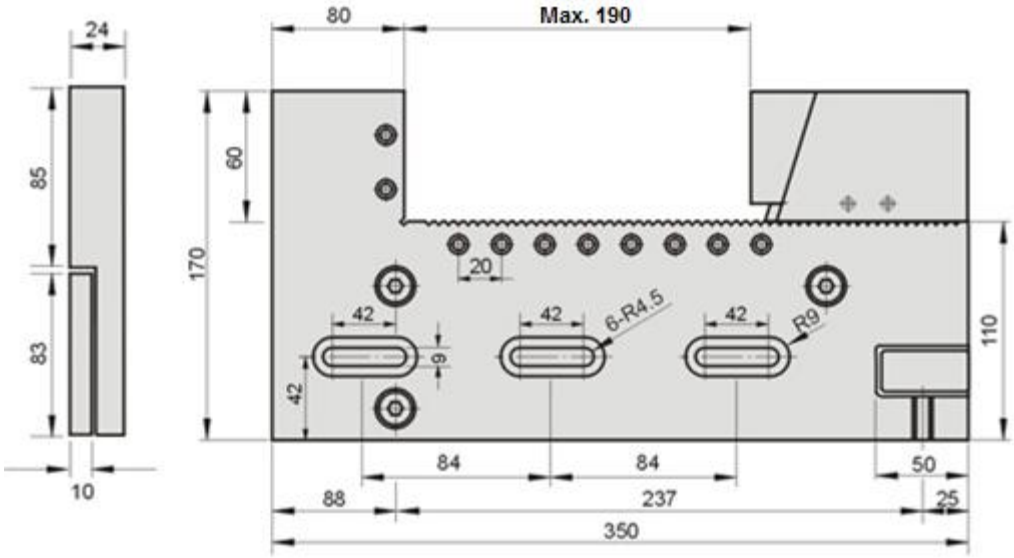

More clamps can be found in the catalogue GIN, or we can offer advice on your request.

ELERO, s.r.o.
Považská Teplá 28
017 05 Považská Bystrica
Slovakia

Tel.: 00421 42 4331991-2
Mobile: 00421 907 411 787
Fax/Tel.: 00421 42 4331990
E-mail: elero@elero.sk www.elero.sk

Clamps and equipment

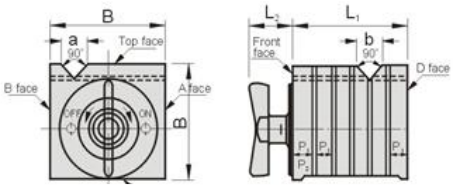

Switchable magnetic square & V-block

- is not from stainless steel material, before and after working in water (for example in wire-cutting EDM), is necessary to treat the magnet with anti-corrosive coating
- is made basically for measuring purposes

Item No.	Model	V-face holding power		Flat face holding power		Dimensions mm								Net weight
		Stone surface plate	Iron surface plate	Stone surface plate	Iron surface plate	B	L1	H	L2	P1	P2	P3	a1b	
54050-10	GIN-BA1	300N	250N	500N	300N	100±0,8	100±0,8	100±0,8	43	17	4	12	26±0,5	6,3 kg
54050-20	GIN-BA2	600N	350N	1800N	1000N	150±1,2	150±1,2	150±1,2	56	24,5	5	19	32±0,8	21,3 kg

FLUSHING SYSTEMS ON MAGNETIC BASE

Item No.	Description
MBFS/2H	Flushing system on magnetic base with 2 flexible article hoses (2x40cm), with 2 valves and 2 cylindrical endings d6mm
MBFS/3H	Flushing system on magnetic base with 3 flexible article hoses (3x40cm), with 3 valves and 3 cylindrical endings d6mm
MBFS/4H	Flushing system on magnetic base with 4 flexible article hoses (4x40cm), with 4 valves and 4 cylindrical endings d6mm
MBFS	Magnetic base D53mm, with 1 input hose connector D10mm, with 4 outputs G1/4´´ and 3 plugs
BVG1/4"IN+OUT (MBFS)	Ball valve G1/4´´ mini, inner + outer thread (for MBFS)

More clamps can be found in the catalogue GIN, or we can offer advice on your request.

ELERO, s.r.o.
Považská Teplá 28
017 05 Považská Bystrica
Slovakia

Tel.: 00421 42 4331991-2
Mobile: 00421 907 411 787
Fax/Tel.: 00421 42 4331990
E-mail: elero@elero.sk www.elero.sk

Clamps and equipment

Permanent magnetic chuck, for wire-cutting EDM

- suitable also for work in water and in liquids

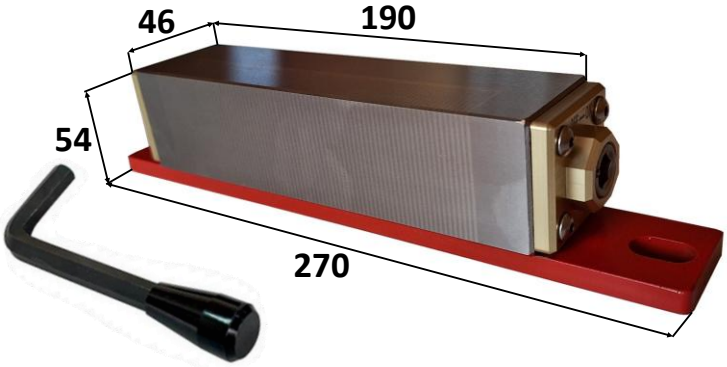

Units: mm

Item No.	Model	Length	Width	Height	Net. weight
54060	MWL-C	190	46	54	3,7kg

Super-thin stainless permanent magnetic chuck

- suitable also for work in water and in liquids

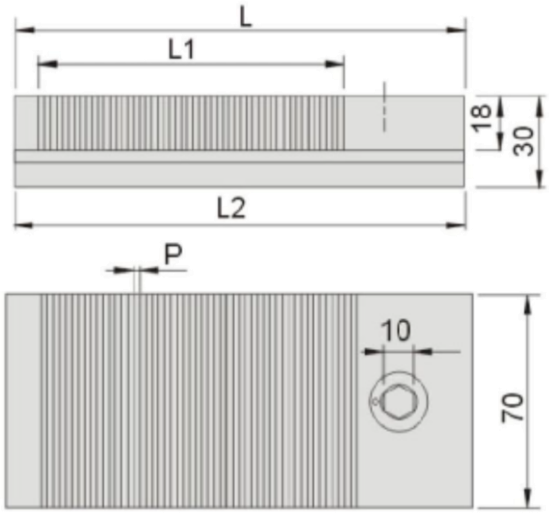

Unit: mm

Item No.	Model	Specif.	L	L1	P	L2	Net. weight
54190-305	MTS-305	70x130	130	77	1,4 (0,4+1)	130	2,2 kg
54190-307	MTS-307	70x175	175	122		175	2,9 kg

More clamps can be found in the catalogue GIN, or we can offer advice on your request.

ELERO, s.r.o.
Považská Teplá 28
017 05 Považská Bystrica
Slovakia

Tel.: 00421 42 4331991-2
Mobile: 00421 907 411 787
Fax/Tel.: 00421 42 4331990
E-mail: elero@elero.sk www.elero.sk

Clamps and equipment

Stainless permanent magnetic chuck

- suitable also for work in water and in liquids
- fine pitch of magnetic field lines, which allows for clamping of small and thin pieces

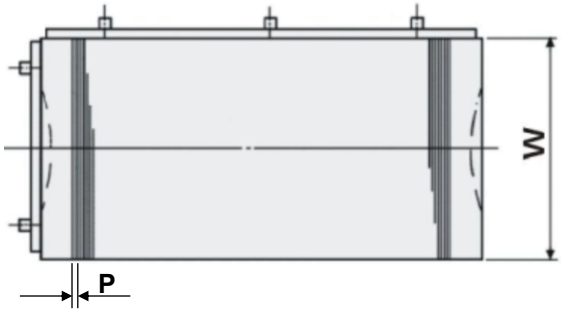

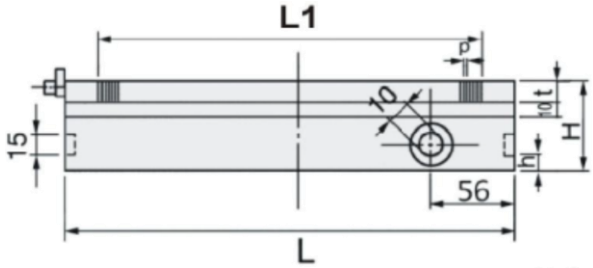

Units: mm

Item No.	Model	Specif.	W	L	L1	t	P	H	Net. weight
54260-01	305VW	75x130	75	130	85	18	stainless 1,4 (0,4+1)	52	4,0 kg
54260-02	307VW	75x175		175	125				5,5 kg
54260-03	312VW	75x300		300	246				9,0 kg
54260-04	407VW	100x175	100	175	125				7,0 kg
54260-05	510VW	125x250	125	250	205				12,0 kg
54260-06	606VW	150x150	150	150	110				9,0 kg
54260-07	612VW	150x300		300	246			58	20,0 kg
54260-08	614VW	150x350		350	296				24,0 kg
54260-09	616VW	150x400		400	346				27,5 kg
54260-10	618VW	150x450		450	390				31,0 kg
54260-11	816VW	200x400	200	400	346				37,0 kg
54260-12	818VW	200x450		450	390				41,5 kg

More clamps can be found in the catalogue GIN, or we can offer advice on your request.

ELERO, s.r.o.
Považská Teplá 28
017 05 Považská Bystrica
Slovakia

Tel.: 00421 42 4331991-2
Mobile: 00421 907 411 787
Fax/Tel.: 00421 42 4331990
E-mail: elero@elero.sk www.elero.sk

Clamps and equipment

Magnetic Induction Block

- suitable also for work in liquids

- non magnetic
- can be magnetized after inducted on any magnetic chuck
- V grooves for clamping of round workpieces

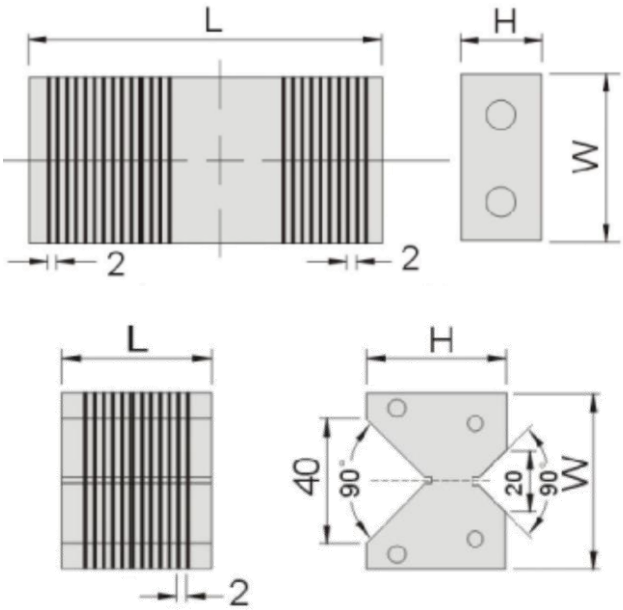

GT1

GT2

GT3

AT1

AT2

AT3

Units: mm

Item No.	Model	L x W x H - pcs	Net weight
54000-10	GT1	100x50x25 -2pcs	2 kg
54000-20	GT2	49x58x46 -2pcs	1,7 kg
54000-30	GT3	98x58x46 -1pcs	3,4 kg
54010-10	AT1	100x50x25 -2pcs	1,2 kg
54010-20	AT2	49x58x46 -2pcs	1,2 kg
54010-30	AT3	98x58x46 -1pcs	1,2 kg

More clamps can be found in the catalogue GIN, or we can offer advice on your request.

ELERO, s.r.o.
Považská Teplá 28
017 05 Považská Bystrica
Slovakia

Tel.: 00421 42 4331991-2
Mobile: 00421 907 411 787
Fax/Tel.: 00421 42 4331990
E-mail: elero@elero.sk www.elero.sk

Clamps and equipment

Magnetic Induction Block

- suitable also for work in liquids

- non magnetic
- can be magnetized after inducted on any magnetic chuck
- V grooves for clamping of round workpieces

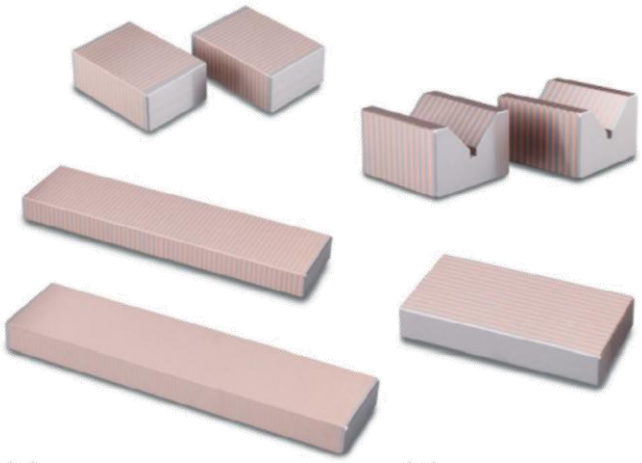

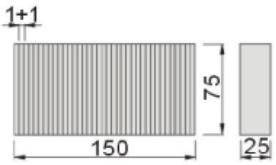

54020-01 HTW-150

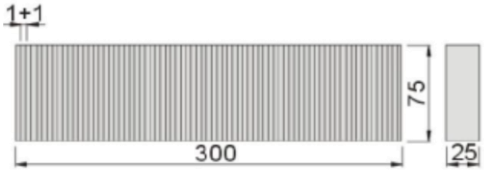

54020-02 HTW-300

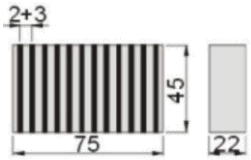

54020-03 HT-75

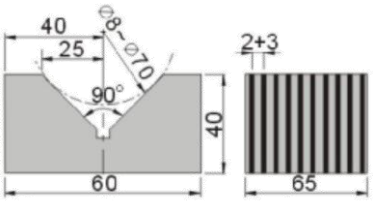

54020-04 HTV-60

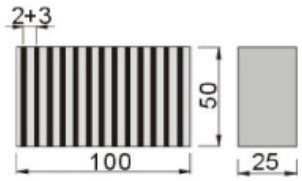

54020-05 HT-100

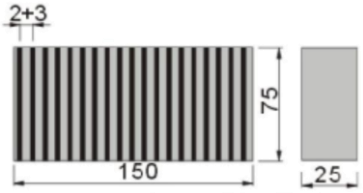

54020-06 HT-150

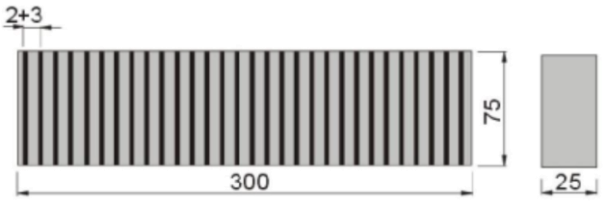

54020-07 HT-300

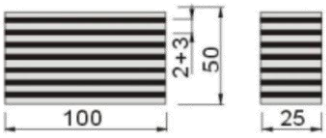

54020-08 HTL-100

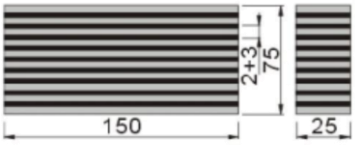

54020-09 HTL-150

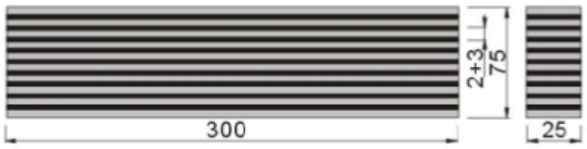

54020-10 HTL-300

Units: mm

Item No.	Model	L	W	H	P	Quantity	Net weight
54020-01	HTW-150	150	75	25	2 (1+1)	1 pcs	2,2 kg
54020-02	HTW-300	300	75	25	2 (1+1)	1 pcs	4,4 kg
54020-03	HT-75	75	45	22	5 (2+3)	2 pcs	1,2 kg
54020-04	HTV-60	65	60	40	5 (2+3)	2 pcs	2,5 kg
54020-05	HT-100	100	50	25	5 (2+3)	2 pcs	2,0 kg
54020-06	HT-150	150	75	25	5 (2+3)	1 pcs	2,2 kg
54020-07	HT-300	300	75	25	5 (2+3)	1 pcs	4,4 kg
54020-08	HTL-100	100	50	25	5 (2+3)	2 pcs	2,0 kg
54020-09	HTL-150	150	75	25	5 (2+3)	1 pcs	2,2 kg
54020-10	HTL-300	300	75	25	5 (2+3)	1 pcs	4,4 kg

ELERO, s.r.o.
Považská Teplá 28
017 05 Považská Bystrica
Slovakia

Tel.: 00421 42 4331991-2
Mobile: 00421 907 411 787
Fax/Tel.: 00421 42 4331990
E-mail: elero@elero.sk www.elero.sk

Clamps and equipment

Switchable magnetic chuck

- fine pitch of magnetic field lines, which allows for clamping of small and thin pieces

- suitable for work in liquids

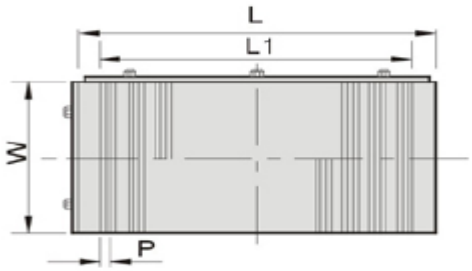

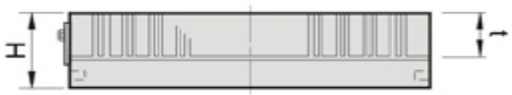

Units: mm

Item No.	Model	Nominal Dimension	Dimensions				Spacing of lines	Height	Net weight
			W	L	L1	t	P	H	
54220-02	GIN-407B	100x175	100	175	145	20	1+3	52	8 kg
54220-04	GIN-510B	125x250	125	250	209	20	1+3	52	14 kg
54220-06	GIN-612B	150x300	150	300	257	23	1+3	60	21,9 kg
54220-08	GIN-614B	150x350	150	350	305	23	1+3	60	25,6 kg
54220-09	GIN-616B	150x400	150	400	357	23	1+3	60	30,5 kg
54220-10	GIN-618B	150x450	150	450	405	23	1+3	60	33,8 kg
54220-12	GIN-816B	200x400	200	400	357	23	1+3	60	38,3 kg
54220-14	GIN-818B	200x450	200	450	405	23	1+3	60	42,8 kg
54220-16	GIN-820B	200x500	200	500	457	23	1+3	60	50 kg

More clamps can be found in the catalogue GIN, or we can offer advice on your request.

ELERO, s.r.o.
Považská Teplá 28
017 05 Považská Bystrica
Slovakia

Tel.: 00421 42 4331991-2
Mobile: 00421 907 411 787
Fax/Tel.: 00421 42 4331990
E-mail: elero@elero.sk www.elero.sk

Clamps and equipment

Switchable magnetic chuck

- normal pitch of magnetic field lines
- suitable for work in liquids

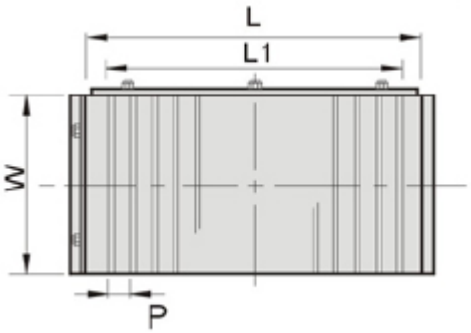

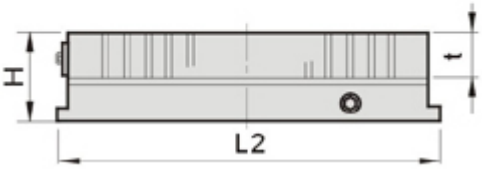

Units: mm

Item No.	Model	Nominal Dimensions	Dimensions				Spacing of lines	L2	Height	Net weight
			W	L	L1	t	P		H	
54230-02	GIN-407E	104x175	104	180	146	20	2+4	192	50	7 kg
54230-04	GIN-510E	125x250	125	255	215			267		13,9 kg
54230-06	GIN-612E	150x300	150	300	254			312		17,5 kg
54230-08	GIN-614E	150x350	150	350	308			362		22,5kg
54230-09	GIN-616E	150x400	150	400	356			412		25,9kg
54230-10	GIN-618E	150x450	150	450	398			462		28,2 kg
54230-12	GIN-816E	200x400	200	400	356			412		32,5kg
54230-14	GIN-818E	200x450	200	450	398			462		35,7 kg
54230-16	GIN-820E	200x500	200	500	452			512		42 kg

More clamps can be found in the catalogue GIN, or we can offer advice on your request.

Clamps and equipment

Switchable magnetic block

- very small pitch of magnetic field lines, which allows clamping of small and thin pieces
- suitable for work in liquids

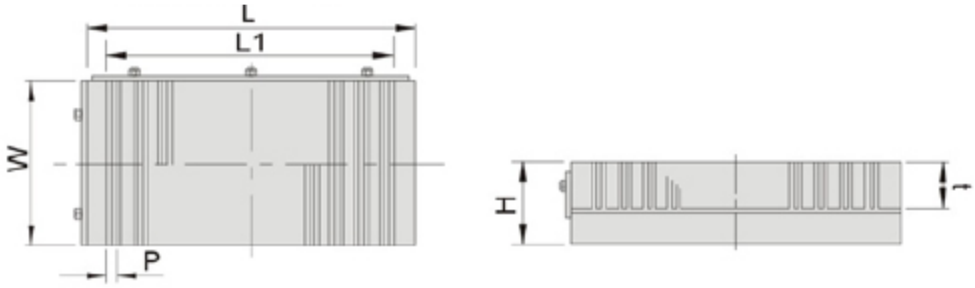

Units: mm

Item No.	Model	Nominal dimensions	Dimensions				Spacing of lines	Height	Net weight
			W	L	L1	T	P	H	
54240-02	GIN-407V	100x175	100	175	145	20	0,5+1,5	52	7,5 kg
54240-04	GIN-606V	150x150	150	150	115	20		52	9,7 kg
54240-06	GIN-510V	125x250	125	250	207	20		52	13 kg
54240-08	GIN-612V	150x300	150	300	257	23		60	21 kg
54240-10	GIN-614V	150x350	150	350	305	23		60	25,8 kg
54240-11	GIN-616V	150x400	150	400	357	23		60	28 kg
54240-12	GIN-618V	150x450	150	450	405	23		60	32,2 kg
54240-14	GIN-816V	200x400	200	400	357	23		60	39 kg
54240-16	GIN-818V	200x450	200	450	405	23		60	40,5 kg
54240-18	GIN-820V	200x500	200	500	457	23		60	47,7 kg

More clamps can be found in the catalogue GIN, or we can offer advice on your request.

ELERO, s.r.o.
Považská Teplá 28
017 05 Považská Bystrica
Slovakia

Tel.: 00421 42 4331991-2
Mobile: 00421 907 411 787
Fax/Tel.: 00421 42 4331990
E-mail: elero@elero.sk www.elero.sk

Clamps and equipment

Rotary switchable magnetic chuck

- very small pitch of magnetic field lines, which allows clamping of small and thin pieces
- suitable for work in liquids
- integrated scale allows to set up variable angle

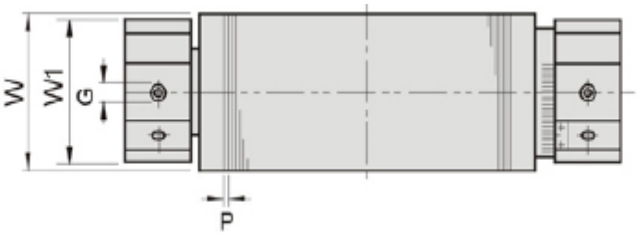

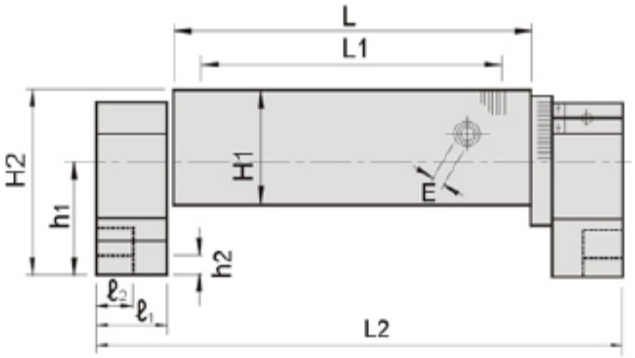

Units: mm

Item No.	Model	Nominal dimensions	Dimensions				Pole pitch	Length	Rotary Base						Height	Net weight
			W	L	L1	H1	P	L2	W1	ℓ_1	ℓ_2	G	h1	h2	H2	kg
54310-07	GIN-407UW	100x175	100	175	125	78	2 0,5+1,5	283	100	50	25	16	103	50	145	21
54310-10	GIN-510UW	125x250	125	250	200			368								30
54310-12	GIN-612UW	150x300	150	300	246			418								38,5
54310-14	GIN-614UW	150x350		350	296			468								42,5
54310-18	GIN-618UW	150X450		450	396			568								52,5

More clamps can be found in the catalogue GIN, or we can offer advice on your request.

ELERO, s.r.o.
Považská Teplá 28
017 05 Považská Bystrica
Slovakia

Tel.: 00421 42 4331991-2
Mobile: 00421 907 411 787
Fax/Tel.: 00421 42 4331990
E-mail: elero@elero.sk www.elero.sk

Clamps and equipment

Sine switchable magnetic block

- very small pitch between magnetic and separating lines 2mm (0,5+1,5mm), which allows clamping of small and thin pieces
- suitable for work in liquids
- tolerance in squareness and parallelism: 0,003mm

Units: mm

Item No.	Model	A	B	C	D	E	Net weight
54130-10	SP47S	175	100	85,4	75	47	10,3 kg
54130-20	SP66S	150	150	85,4	100	47	12,7 kg
54130-22	SP510S	250	125	85,4	100	47	18,3 kg
54130-30	SP612S	300	150	85,4	100	47	26,7 kg

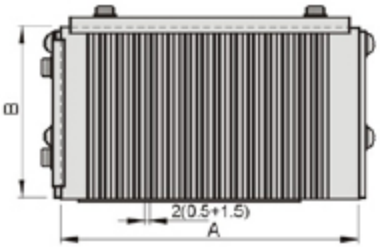

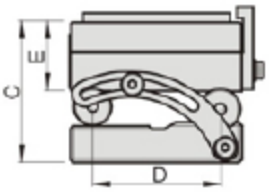

Sine switchable magnetic block
- adjustable in two axis

- very small pitch between magnetic and separating lines 2mm (0,5+1,5mm), which allows clamping of small and thin pieces
- suitable for work in liquids
- tolerance in squareness and parallelism: 0,003mm
- central distance of rolls (D,E): within 0,005mm

Units: mm

Item No.	Model	A	B	C	D	E	F	Net weight
54140-10	CSP47S	175	100	122	100	75	47	13,5 kg
54140-20	CSP66S	150	150	122	100	100	47	16,8 kg
54140-22	CSP510S	250	125	122	200	100	47	23,4 kg
54140-30	CSP612S	300	150	122	200	100	47	33,1 kg

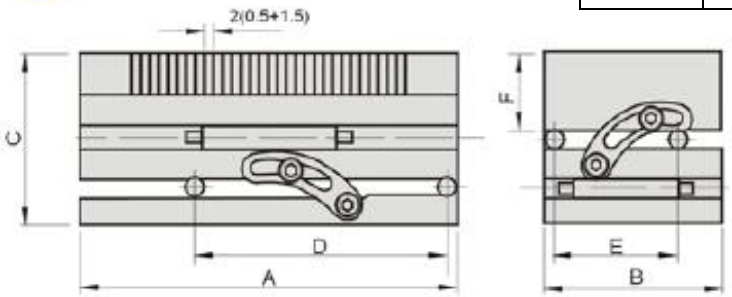

More clamps can be found in the catalogue GIN, or we can offer advice on your request.

ELERO, s.r.o.
Považská Teplá 28
017 05 Považská Bystrica
Slovakia

Tel.: 00421 42 4331991-2
Mobile: 00421 907 411 787
Fax/Tel.: 00421 42 4331990
E-mail: elero@elero.sk www.elero.sk

Clamps and equipment

Sine switchable magnetic block

- very small pitch between magnetic and separating lines 2mm (0,5+1,5mm), which allows clamping small and thin pieces
- suitable for work in liquids
- easy angles adjustment

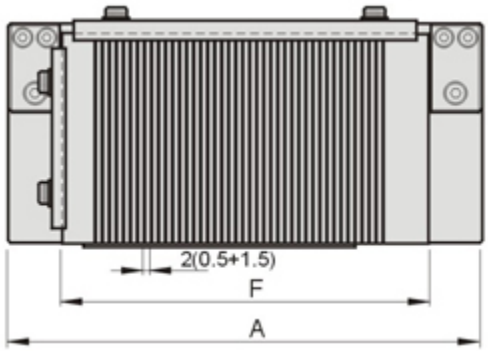

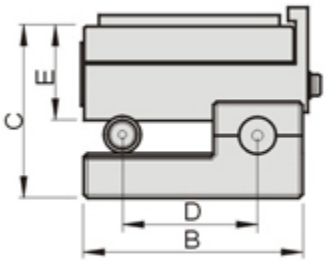

Units: mm

Item No.	Model	A	B	C	D	E	F	Net Weight
54150-10	MSP35S	160	75	74	50	40	130	6,5 kg
54150-20	MSP47S	225	102	87	75	47	175	11 kg
54150-30	MSP66S	200	152	87	100	47	150	14,8 kg
54150-40	MSP510S	300	127	87	100	47	250	20 kg
54150-50	MSP412S	350	102	87	100	47	300	20,3 kg
54150-60	MSP612S	350	152	87	100	47	300	27,5 kg

More clamps can be found in the catalogue GIN, or we can offer advice on your request.

ELERO, s.r.o.
Považská Teplá 28
017 05 Považská Bystrica
Slovakia

Tel.: 00421 42 4331991-2
Mobile: 00421 907 411 787
Fax/Tel.: 00421 42 4331990
E-mail: elero@elero.sk www.elero.sk

Clamps and equipment

Sine switchable magnetic block
- adjustable in two axis

- extra strong, hardened precision ground base
- very small pitch between magnetic and separating lines 2mm (0,5+1,5mm), which allows clamping of small and thin pieces
- suitable for work in liquids
- easy angles adjustment
- squareness, parallelism and flatness tolerance: within 0,005mm/100mm
- central distance of rolls (D, E): within 0,005mm

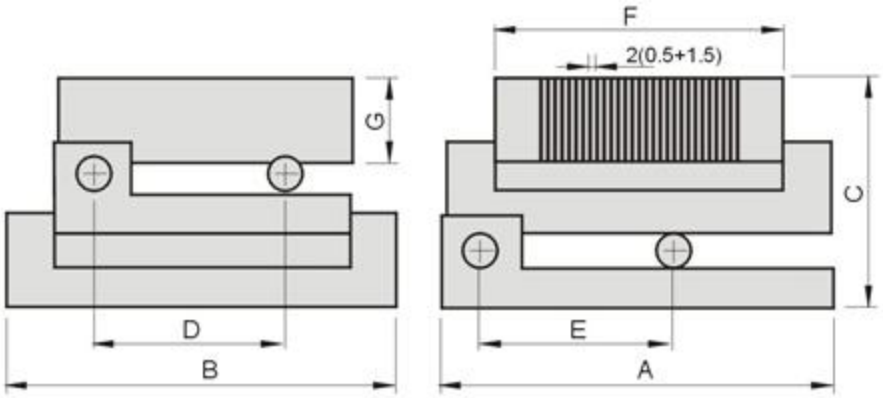

Units: mm

Item No.	Model	A	B	C	D	E	F	G	Net weight
54160-10	CMSP35S	160	105	105	50	75	130	40	10 kg
54160-20	CMSP47S	225	150	122	75	100	175	47	16 kg
54160-30	CMSP66S	200	200	122	100	100	150	47	20,9 kg
54160-40	CMSP510S	300	175	122	100	200	250	47	28 kg

More clamps can be found in the catalogue GIN, or we can offer advice on your request.

ELERO, s.r.o.
Považská Teplá 28
017 05 Považská Bystrica
Slovakia

Tel.: 00421 42 4331991-2
Mobile: 00421 907 411 787
Fax/Tel.: 00421 42 4331990
E-mail: elero@elero.sk www.elero.sk

Clamps and equipment

High-precision sine plate

- suitable for work in liquids
- material: precious steel hardened to 55° - 58° HRC
- tapped holes M6x1 - in top plate, resp. for model SP612 thread M10x1,5
- adjustable angle from 0° to 60°
- parallelism and squareness within 0,005mm
- central distance of rolls (D): within 0,005mm, resp. for model SP612 within 0,008mm

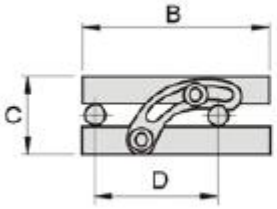

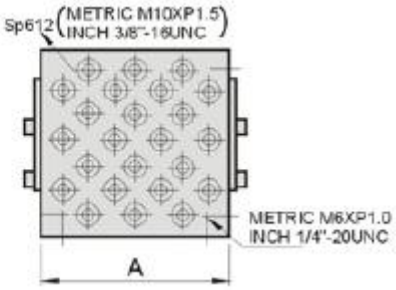

Units: mm

Item No.	Model	A	B	C	D	Net weight
54090-10	SP47	175	100	60	75	6,5 kg
54090-20	SP66	150	150	60	100	8,1 kg
54090-30	SP612	300	150	60	100	15,8 kg

More clamps can be found in the catalogue GIN, or we can offer advice on your request.

ELERO, s.r.o.
Považská Teplá 28
017 05 Považská Bystrica
Slovakia

Tel.: 00421 42 4331991-2
Mobile: 00421 907 411 787
Fax/Tel.: 00421 42 4331990
E-mail: elero@elero.sk www.elero.sk

Clamps and equipment

High-precision sine plate
- adjustable angle in two axis

- suitable for work in liquids
- material: precious steel hardened to 55° - 58° HRC
- tapped holes M6x1 in top plate, resp. for model CSP612 thread M10x1,5
- adjustable angle from 0° to 60°
- parallelism and squareness within 0,005mm
- central distance of rolls (D): within 0,005mm, resp. for model CSP612 within 0,008mm

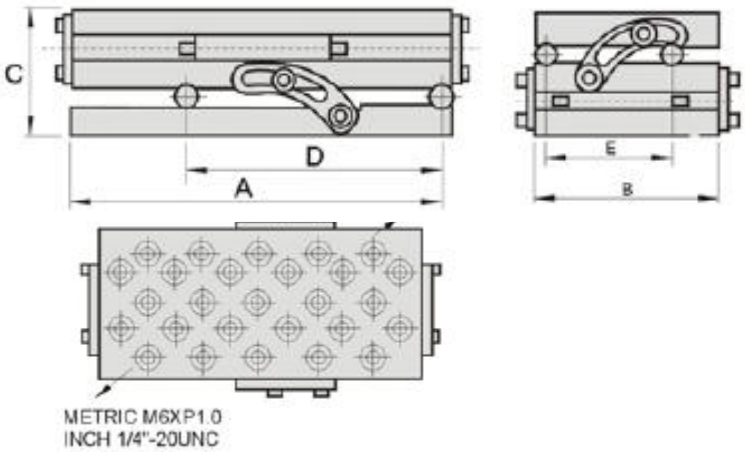

Units: mm

Item No..	Model	A	B	C	D	E	Net weight.
54100-10	CSP47	175	100	100	100	75	9,7 kg
54100-20	CSP66	150	150	100	100	100	12,2 kg
54100-30	CSP612	300	150	100	200	100	23,4 kg

More clamps can be found in the catalogue GIN, or we can offer advice on your request.

ELERO, s.r.o.
Považská Teplá 28
017 05 Považská Bystrica
Slovakia

Tel.: 00421 42 4331991-2
Mobile: 00421 907 411 787
Fax/Tel.: 00421 42 4331990
E-mail: elero@elero.sk www.elero.sk

Clamping tools and equipment GIN

1. Tool maker vises

Tool maker vises – catalog

2. Magnetic tools

Magnetic tools – catalog

3. Machining vises, clamping toolss

Machining vises, clamping tools – catalog

4. Wire EDM clamps

Wire EDM clamps – catalog

5. Punch formers, wheel dresser, dividing devices

Punch formers, wheel dresser, dividing devices – catalog

6. Measuring tools

Measuring tools – catalog

7. Milling chucks and collets

Milling chucks and collets – catalog

8. Boring head system

Boring head system – catalog

9. Lathe accessories

Lathe accessories – catalog

10. Cutting tools

Cutting tools – catalog

11. Chamfering machine, Re-sharpening machines, Tapping machines

Chamfering machines, Re-sharpening machines, Tapping machines – catalog